ASPEN INSERT FIRE

CONVENTIONAL FLUED
INSERT GAS FIRE RANGE

NATURAL GAS – UNDER LOG BURNER - PISTOL TYPE

STOVE FRONT VERSION

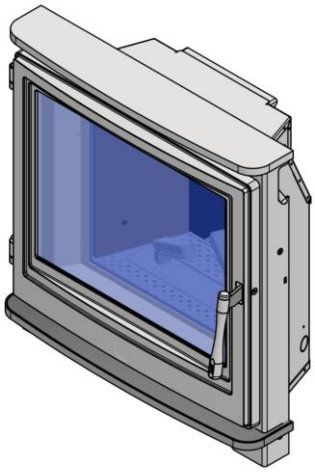

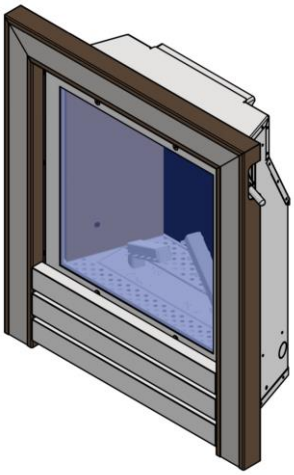

3 SIDED FRONT VERSION

5.70 kW Gross Heat Input
Slide & Remote Valve – Oxy Pilot

INSTALLATION, SERVICING
AND USER OPERATING INSTRUCTIONS

For use in GB (United Kingdom)

Valve System (Slide Control Version & Remote Version)

ALL INSTRUCTIONS MUST BE LEFT WITH THE CUSTOMER AFTER INSTALLTION FOR SAFE KEEPING

Do not use this appliance if the front glass panel is broken, removed or fixed incorrectly

It is a regulation that these instructions are handed to the customer after installation is complete. It is also the responsibility of the installation engineer to ensure that the customer is able to fully operate the appliance and is aware of any cleaning or maintenance requirements. This product is not suitable for primary heating purposes.

This Stove is –

FUEL Type: Natural Gas

Important Notice - *please read carefully*

This is a Mandatary Requirement the gas feed pipe to the rear/side of this stove must be a minimum of 15mm in diameter this will ensure the correct pressure and flow to the stove.

THIS STOVE AND FLUE SYSTEM (IF FITTED) MUST BE INSTALLED & COMMISSIONED BY A COMPETENT GAS SAFE REGISTERED PERSON ONLY FOR THE WARRANTY TO BE VALID

Mandatory Requirement for Installing & Commissioning this stove:

- **15mm diameter minimum gas feed pipe to this stove, then reduced to fit the 8mm flexible pipe fitted to the rear of this stove**
- **Fitting of an ON/OFF Tap with a Pressure Test Point fitted to this stove/fire (this tap is not supplied with the stove)**
- **The stove is installed, commissioned & operated as stated in this manual**
- **A Carbon Monoxide Detector is fitted in the room where the stove is installed**
- **The flue installed or the chimney meets the Building Regulations standard**
- **The installation of this stove is in accordance to the latest version as stated under Building Control – Building Regulations 2002 Part J & Gas Safe requirements**
- **It is the responsibility of the Commissioning Engineer to ensure this appliance is gas tight, gas safe & a Spillage Test has been completed before Sign Off & hand over to the customer**
- **This stove is only operated with the front glass fitted and sealed correctly and the glass is not cracked or broken in anyway**

For the warranty to be valid this stove must be registered in England & Wales for a

BUILDING REGULATIONS COMPLIANCE CERTIFICATE

or the equivalent in Scotland, Northern Ireland,
Isle of Man, Guernsey and Jersey - please visit this website for detailed information
https://www.gassaferegister.co.uk/help-and-advice/gas-safety-certificates-records/building-regulations-certificate/

Please note - The Leaf Stoves warranty does not cover the installation of the stove or the flue system if these are found to be at fault they are not covered under the warranty

YOU MUST APPLY FOR THIS - What are the Building Regulations?

The Building Regulations are designed to make sure buildings are safe to use and inhabit. As part of this aim, in England and Wales local authorities must always be informed when a heat producing appliance is installed in a property, so a **Building Regulations Compliance Certificate** can be issued.

If your Gas Safe registered business has installed a heat producing appliance (such as a boiler or fire), they'll need to comply with the regulations and notify (self-certify) these appliances with the relevant local authority within 30 days of installation. If you're a homeowner, it's also up to you to ensure the Building Regulations are adhered to by making sure your engineer notifies the installation.

If you need a duplicate Building Regulations Certificate, please visit the Gas Safe website

How to get a Building Regulations Certificate

Your Gas Safe registered engineer just needs to notify through Gas Safe Register. Once they've done this, we will inform your local authority and you'll receive your Building Regulations Compliance Certificate in the post in 10-15 working days.

Because the Building Regulations Compliance Certificate belongs to the property in which the appliance has been installed, make sure you keep it safe; it'll come in useful if you sell your home or decide to remortgage. For example, if a new boiler has been installed, the certificate confirms that the boiler has been installed correctly and safety at the property.

Requirements in other regions

Similar requirements to the above exist in Isle of Man and Guernsey.

The requirements are different if you're in Scotland or Northern Ireland. For more information on Scottish regulations, head to the Scottish government website. For Northern Ireland, visit Building Control NI.

Registered engineers can notify through Gas Safe Register. Once complete, a Building Regulations Compliance Certificate should arrive via post within 10-15 working days. As the certificate belongs to the property, you'll need to keep it in a safe place as it'll be useful should you decide to sell your home (to pass onto the next owner) or re-mortgage.

Similar requirements to the above exist in Isle of Man and Guernsey, but not in Scotland and Northern Ireland. For more information on Scottish regulations you can visit the Scottish government website, and further details on the regulations in Northern Ireland are available on the Building Control NI site.

Additional information

Once your new installation is complete, the local authority needs to be notified within 30 days. You can contact us at Gas Safe Register to:

- Check your engineer has notified the appliance
- Order a replacement certificate if needed

If your Gas Safe registered engineer hasn't notified the installation within 30 days, contact them and ask them to do so as soon as possible.

For the warranty to be valid this stove must be registered in England & Wales for a BUILDING REGULATIONS COMPLIANCE CERTIFICATE or the equivalent in Scotland, Northern Ireland, Isle of Man, Guernsey and Jersey - please visit this website for detailed information

https://www.gassaferegister.co.uk/help-and-advice/gas-safety-certificates-records/building-regulations-certificate/

Please note - The Leaf Stoves warranty does not cover the installation of the stove or the flue system if these are found to be at fault they are not covered under the warranty

Installation Information

Please complete the following form for reference when required:

Ref.	Description	Please Complete
1	**Which retailer did you purchase the stove from?**	**Name & Address of Retailer:**
2	**What date did you purchase your new stove?**	**Date:**
3	**What was the name of the gas fitter that installed your stove?**	**Full Name:** **Contact Number:**
4	**What is the installer Gas Safe Registration Number?**	**Gas Safe Registration No.:**
5	**What is the serial Number of your stove?** *This can we found inside the front door above the bottom hinge*	**Serial Number:**
6	**What date was your stove installed?**	**Date:**
7.	**Model & Gas Type reference for this stove is**	**Stove Models:** *circle which model you have* **Leaf Aspen Slide Valve – 3 Sided frame** **Leaf Aspen Slide Valve – Stove Front** **Leaf Aspen Remote Valve – 3 Sided frame** **Leaf Aspen Remote Valve – Stove Front** **Gas Type – Natural Gas**

Who Can Fit My New Leaf Stoves Stove Gas Stove:

Before the Gas Engineer can commence working on this stove they must be Gas Safe - qualified and registered for Natural Gas to install, commission and service this stove to the Domestic Gas Safety (**CCN1**) standard as a minimum and also have the (HRT 1) Category on their Gas Safe Individual Register listing which can be verified at **www.gassaferegister.co.uk**

HTR 1 - Category = Fire/Space Heater - Competent in the install, exchange, commission, disconnect, service, repair, safety checking and break down of domestic gas fires, wall heaters, convector heaters, stoves and flueless gas fires.

The installation of this stove is Notifiable Under Building Control – Building Regulation 2002 Part J

Content

Content
Installation Information **– please complete**
General Notes
User instructions
Emergency Gas Isolation
First Time Operation & Paint Curing & Stove Dimensions • Curing the Paint
Understanding the Controls to Operate this Gas Stove • Understanding how to use the Slide Control & Remote Control
Care & Maintenance of the Batteries
What Comes with My Stove
Installation instructions
Gas Connection
Ventilation
Appliance Free standing Installation
Appliance Building into a False Chimney • Distance to Combustibles and Non Combustibles
Appliance Fireplace Opening Installation
Flue Connection • Terminal Locations, Flue Systems & Fitting a Flue Restrictor
Fuel Bed Arrangements – Step By Step Log Layout
Commissioning the Appliance • Pilot Ignition Check • Burner Check • Pressure Check • Frequency Asked Questions
Servicing
Cleaning the Ceramics
Servicing the Burner • Gas Control Valve Information • Gas Control Valve Assessment • Cleaning & Serving the Pilot Assembly • Checking the Batteries
Technical Information • Burner Data
Parts List
Warranty Details
Appliance Commissioning Checklist & Customer Sign Off **– please complete**
Annual Servicing Records **– please complete**

STOVE DIMENSIONS – ASPEN INSERT FIRE

WITH 3 SIDED FRONT OR STOVE FRONT – SHOWN WITH NO FRONTS FITTED

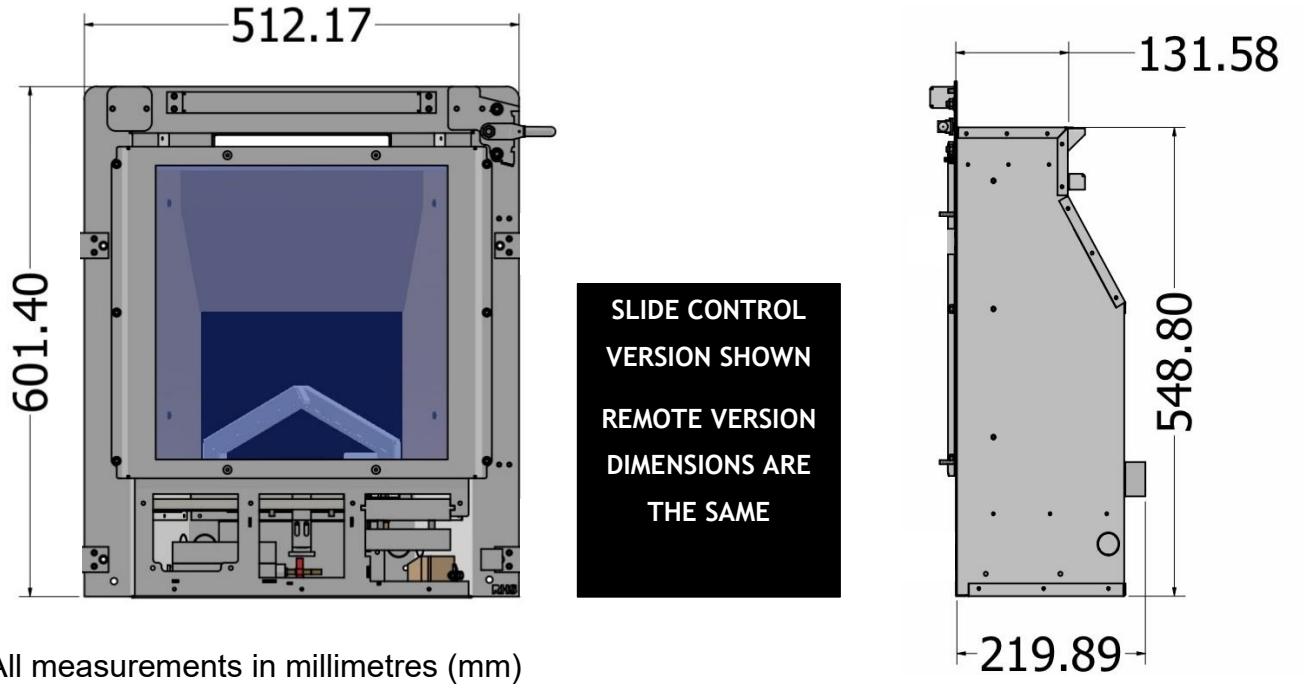

All measurements in millimetres (mm)

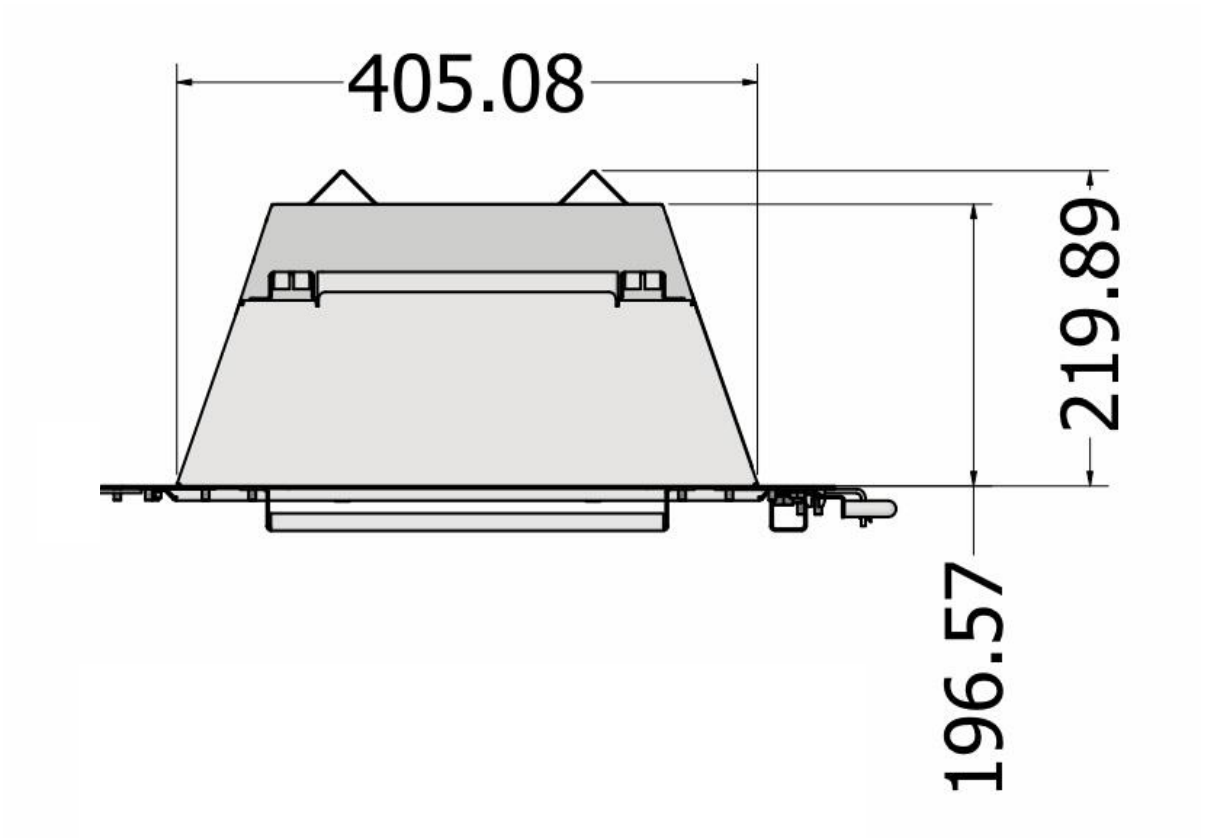

THE FRONT GLASS PANEL ON THIS STOVE WILL BECOME VERY HOT DURING OPERATION - DO NOT TOUCH IT IN ANY WAY

1. General Notes - Important Please Read

This gas appliance is a High Efficiency, Conventionally Flue Log Fuel Effect appliance. It provides radiant and conventional heat using the latest burner technology, as well as having a variable heat output.

- Before Installation, check that the local distribution conditions, nature of the gas and pressure, and adjustment of the appliance are compatible.
- This appliance is intended for use on a gas installation with a governed meter.
- This Gas Installation **may only be installed by a registered professional competent person (Gas Safe Registered and Qualified Installer in the UK)**. The installation must adhere to the requirements of the local and national Building regulations and national standards. This installation manual must also be followed.
- Ensure that the Flue Terminal is not in any way obstructed and is clear of vegetation, i.e. trees, shrubs etc. and that no objects are leant against the terminal or guard.
- **Always clean the Front Window Panel before the fire is ignited. Any finger prints must be removed, as these will be burnt into the glass and will be un-removable.**
- Do not operate this appliance if the glass panel has been broken (or cracked), removed or with firebox access panels open.
- This appliance is designed as a heating appliance, and as such will get very hot in operation; all surfaces are considered to be working surfaces and as such should not be touched. The front window and surrounds are not considered to be fully secure guards against accidental contact. It is recommended that an approved fire screen be used if children, the elderly or persons with limited mobility are to be present in the same area.
- Do not place curtains, laundry, furniture etc. within a safe distance of 1000mm (HOT ZONE) of this appliance when in operation
- Do not attempt to burn rubbish on this appliance.
- Only use the Leaf Stoves approved and supplied Log set and embers
- If this appliance is extinguished (turned off), on purpose or otherwise, no attempt to relight should be made within 3 minutes as the thermocouple inside the stove needs to reset automatically when the firebox heat reduces accordingly
- Each stove burner has been fully tested before being dispatched, the complete Gas Burner Assembly which includes the Pilot Assembly, Gas Control Valve (GCV) and Remote Control Handset have all be thoroughly tested and approved

2.0 User Instructions – Important Please Read

2.1 Emergency Gas Isolation - Installation of the Gas Isolation Tap with Pressure Test Point

This stove must be fitted with a Gas Isolation Valve to the front, side or the rear or side of the stove which can be easily accessed by the user. This is not supplied by Leaf Stoves

Installing Conditions:

By law this appliance must be installed in accordance with the rules in force and used only in a sufficiently ventilated space. The appliance is manufactured for countries of destination GB and NI

Please consult instructions before installation and use of this appliance.

Note: The burner pressures are factory set and cannot be altered.

Before installation, ensure that the local distribution conditions (identification of the type of gas and pressure) and the adjustment of the appliance are compatible.

The spillage monitoring system shall not be adjusted by the installer, the spillage monitoring system shall not be put out of operation, any parts to be replaced relating to the spillage monitoring system shall be only manufacturers original parts.

The whole of the appliance is classes as the working surface

For your safety it is law that all gas appliances must be installed by a competent person.

The installation must be carried out in accordance with the relevant local and national specifications and comply with current Building Regulations.

It is a mandatory requirement that the installation of a Carbon Monoxide detector that conforms to EN 50291 is installed in the same room as the gas appliance is installed.

It is recommended the use of a gas liner for this product in accordance with local and national regulations.

The flue must not be shared with any other appliance.

The flue must be fitted in accordance with local and national regulations.

The flue must be inspected by a competent person and passed for use with the appliance.

It is advised the flue system on an annual basis to ensure that the flue system is sound and the combustion products outlet is clear of obstruction.

The flue system should only be fitted to the appliance where the chimney serving the appliance

- Has passed a flue flow test to ensure that the flue is sound and without leaks; and
- Has been swept if previously used for solid fuel.

The pilot light and flame sensing device fitted to this appliance is also an atmospheric sensing device, this is not adjustable and must not be altered or removed. If the pilot light is damaged or faulty it should only be replaced immediately.

All new building work for the appliance must be dried for a minimum of 4 weeks prior to install.

It is recommended that a guard be used for the protection of young children, the elderly or infirm and also for normal use conforming to BS8423:2002, such that access to the hot appliance is minimised.

Do not place combustible materials directly in front of the appliance.

In case of a damaged or broken glass, do not use the appliance.

Clean the glass before you use the appliance in order to prevent dirt from burning on the glass.

The appliance is fitted with a data plate and must not be removed it is used for warranty and servicing.

MANDATORY REQUIREMENT - When installing this stove the Gas Safe Installer must fit a gas isolation valve at the front, rear or side of the stove with a pressure test point incorporated into the ON / OFF Tap – this will used to test the gas Inlet/Standing Pressure - Please make the customer aware of where this valve is fitted and that they can access it easily

Gas Isolation Valve – We recommend you turn the gas supply OFF to the stove if you are not using it for a long period of time, please use the gas isolating ON/OFF valve that your fitter would have installed when the stove was fitted.

This **Gas Isolation Valve** is not part of the components Leaf Stoves supply with the stove, your installer will supply this. Please note it must have a gas pressure test point built into the valve

In the event of a gas leak or if gas is smelt, the appliance must be isolated. This is done by turning OFF the gas at the **ON / OFF** Isolation Tap. This Isolation Tap should be fitted to the rear or side of the appliance, with easily access to operate.

	This stove is fitted with an 8mm diameter compression fitting on the end of the flexible gas inlet pipe. From this flexible inlet pipe - the gas isolation tap must be fitted. This must be fitted so the customer is able to easily access and isolate the gas supply to the stove if required **If any foreign objects are found in the Gas Control Valve such as brick dust, this is not covered by the Leaf Stoves Warranty**

2.2 First Time of Operation

Before igniting the appliance, ensure that all packaging, safety stickers and any protective wrapping have been removed, and that the glass has been cleaned, including all fingerprints from the glass.

Ensure that the room is adequately ventilated the first time that the appliance is ignited; we would recommend opening windows if possible.

Curing the Paint – First Time Usage

- **Run the appliance at a 25% setting for a 1 hour**
- **Then at a 50% Setting for 1 hour**
- **Then Finally on Full Power 100% for 1 hour**
- **This will then allow the paint the opportunity to fully cure. During this period it is possible for some fumes and vapours to be given off.**
- **We would recommend keeping children and pets out of the area at this time.**

Please Note:

In the Hot zone at the front of the stove, do not place to dry laundry as if could cause a FIRE, if children, the elderly or persons with limited mobility are in the room unoccupied a Fire Guard must be installed

REGULATORY INFORMATION & INSTALLATION REQUIREMENTS

THE FOLLOWING MUST BE NOTED PRIOR TO THE INSTALLATION OF THIS APPLIANCE.
This gas appliance MUST be installed by a GAS SAFE registered installer by law. It must be installed in accordance to these installation Instructions and the GAS SAFETY (Installation & Use) REGULATIONS 1998 as amended. Non compliance of this law may lead to prosecution and it is in the interest of you and your family that this condition is observed.

The installation of this appliance must be in accordance with the relevant parts of the LOCAL AND NATIONAL BUILDING REGULATIONS as issued by the Department of the Environment or BUILDING STANDARD (Scotland Consolidation) REGULATIONS issued by the Scottish Development Department and the following relevant British Standards:

- BS5871 Part 2 Installation of Inset Live Fuel Effect Gas Fires
- BS5440 Parts 1 & 2 Installation of Flues and Ventilation
- BS6891 Installation of Gas Pipe-work
- BS6461 Part 1 Installation of Chimneys and Flues
- BS1251 Open Fireplace Components
- BS715/BS EN 1856-2 Metal Flue Boxes / Metal Flue Pipes for Gas Appliances
- BS EN 1858 Chimneys Components & Concrete Flue Blocks
- IS813:1996 Domestic Gas Installation (Republic of Ireland)

Prior to installation ensure that the gas supply is compatible with the appliance, this appliance must only be used on **natural gas** at a supply pressure of 20 mbar as marked on the data plate on the appliance This appliance is only to be installed into a builders opening which must be constructed of non-combustible materials confirming to BS1251 or a suitable flue-box complying with the requirements of BS715/BS EN 1856-2.

If the product is being installed into a builders opening the chimney must be at least 3 metres in height and should be swept before installation if it has been used for the burning of solid fuel (e.g. coal or wood). The chimney must only serve as a flue-way to this appliance and must have no openings to any other room. The opening should be inspected and any exposed brickwork should be repaired where necessary. The chairbrick (if applicable) can be removed, or if using a flue box must be removed. Ensure that the chimney/flue only serves one fireplace. Remove or securely fix open and dampers or register plates. If the product is being installed into a fabricated Flue-box (to BS715) it must be installed onto a non-combustible surface with a thickness of at least 12mm. The flue should be checked for draw using a smoke bomb or similar, if there is a definite draw then the installation of the appliance can proceed.

No purpose made **ventilation** is normally required for this appliance when installed in G.B. If the appliance is being installed in I.E then refer to I.S 813:1996 (Domestic Gas Installation National Standards Authority of Ireland). Ventilation areas (if applicable) should be checked periodically to ensure there is no obstruction even though none is normally required for this appliance.

It is mandatory that the safe clearance of products be checked by performing a smoke match test as described in this manual

SPILLAGE TESTING

To check for satisfactory clearance of products of combustion, close all doors and windows and leave the appliance burning on HIGH for five minutes. Insert a lit smoke match 35mm into the centre top opening above the glass, all the smoke must be drawn into the flue. If spillage occurs allow a further 5 minutes and repeat the test. If spillage still occurs turn off the appliance and seek expert advice. If an extractor fan is situated in the room the spillage test should be repeated with the fan running. If there is a connecting room with an extractor fan the test should be repeated with all the doors to that room open and the extractor fan running.

This appliance is supplied with a restrictor (loose in the pack) which can be fitted to the inside top flue gas outlet of the firebox (see details on the next page) if the flue is a minimum of 5 metres in height and the flue pull is excessive (normally indicated by smoke being entrained into the spillage point with the smoke match withdrawn). If this restrictor is fitted to the appliance the spillage test must be conducted as above.

If the appliance spills with the restrictor fitted then the restrictor should be removed and the spillage test repeated. If the spillage test continues to fail expert advice should be sought and additional ventilation may have to be provided.

This appliance must only be installed on to a suitable non-combustible hearth with a minimum thickness of 12mm. The appliance **must not be** installed directly onto carpet of other combustible floor materials. The fireplace surround (back-panel) must be 'O' rated and have a temperature rating of at least 150°C

- Do not place soft wall coverings (i.e. embossed papers etc,) furniture or other combustible items too close to the fires as they may discolour or scorch.
- Do not place or throw rubbish or otherwise on the fuel-bed.
- Do not place any combustible materials or flooring (i.e. carpets etc,) on any part of the hearth.

WARNING: This appliance has a naked flame and as with all heating appliances a fireguard should be used for the protection of children, the elderly and infirm. The fireguard should conform to BS8423 : 2002 (Fireguards or use with Gas Heating Appliances).

Important Note: It is quite normal for a flame effect gas appliance to experience a small amount of soot or staining to some parts of the fuel effect components. If this becomes excessive it may because the fuel bed is not fitted correctly — this should be checked according to these installation instructions prior to contacting a service engineer.

It is very important that you arrange for a GAS SAFE registered engineer to service your appliance every 12 months – during this service the engineer will remove the appliance and check for debris, check the operation of the flue and check the operation of the appliance. This is important for you and your families safety.

- **NEVER** place any rubbish or otherwise onto the fire—this will affect the way the product operates and may affect the warranty of the product.
- **NEVER** place more ceramic components onto the fuel bed than specified in the instructions.
- **NEVER** touch the ceramics when the appliance has recently been switched off—these components retain heat and may cause burns. Leave the appliance to sufficiently cool prior to any contact of the ceramics.

ADJUSTING THE FLUE RESTRICTOR PLATE

This flue resistor is fitted to the inside top of the fire and is set in the maximum open position. This fire can only be fitted if the flue is a minimum of 3 metres in height above the fire, always check the flue draw is sufficient to pull the fumes up the chimney. Always fit a cowling to the top of the chimney to prevent down draughts, rain and foreign objects entering the chimney that can cause any sort of blockage. Always ensure that the chimney has been swept prior to installation, we recommend fitting a 5" stainless steel flexible liner. If a liner is not being used ensure that there are no cracks where flue gas can leak into any rooms always ensure that the chimney is secure and safe

Once this fire is fitted you must perform a SPILLAGE TEST to ensure that the fumes and all exhaust gases are being fully drawn up the chimney. If the draw on the chimney is too high the flue restrictor can be closed off until the draw is reduced and the pilot and the flames on the logs are stable. If you adjust the flue restrictor you must perform a further SPILLAGE TEST to ensure that the fire is safe to be used. You must ensure that a CARBON MONOXIDE ALARM is fitted in the room and is in fully working order where the fire is installed within a 3 metre radius of the fire

FLUE RESTRICTOR PLATE FITTED IN THE FULLY OPEN POSITION

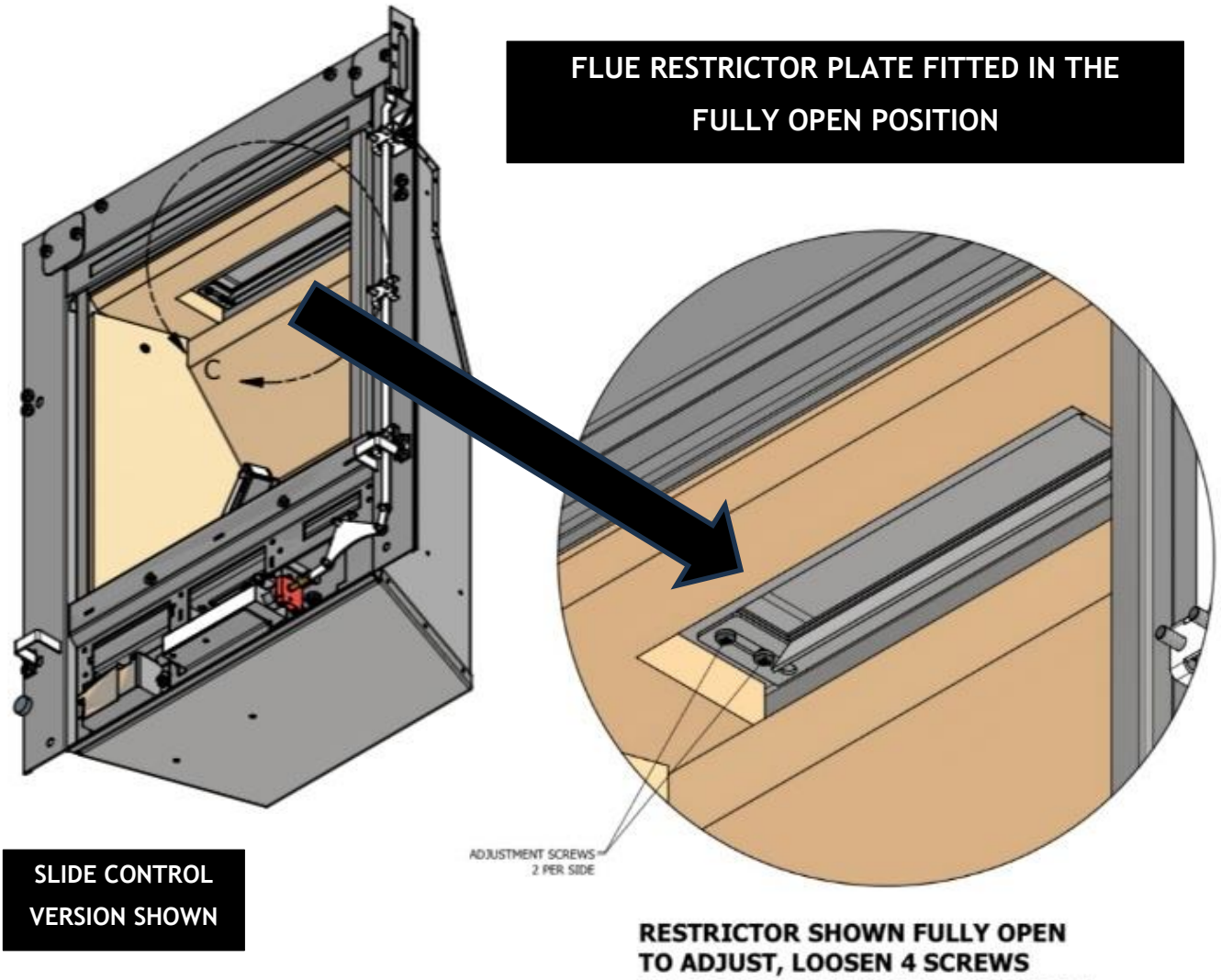

SLIDE CONTROL VERSION SHOWN

**RESTRICTOR SHOWN FULLY OPEN
TO ADJUST, LOOSEN 4 SCREWS
AND SLIDE RESTRICTOR TOWARDS
FRONT OF FIREBOX AND RE-TIGHTEN SCREWS**

RESTRICTOR PLATE FLAP SITS IN THIS ORIENTATION WITH THE FLAP FITTING DOWN INTO THE FIRE BOX - DO NOT FIT THE OPPOSITE WAY AROUND

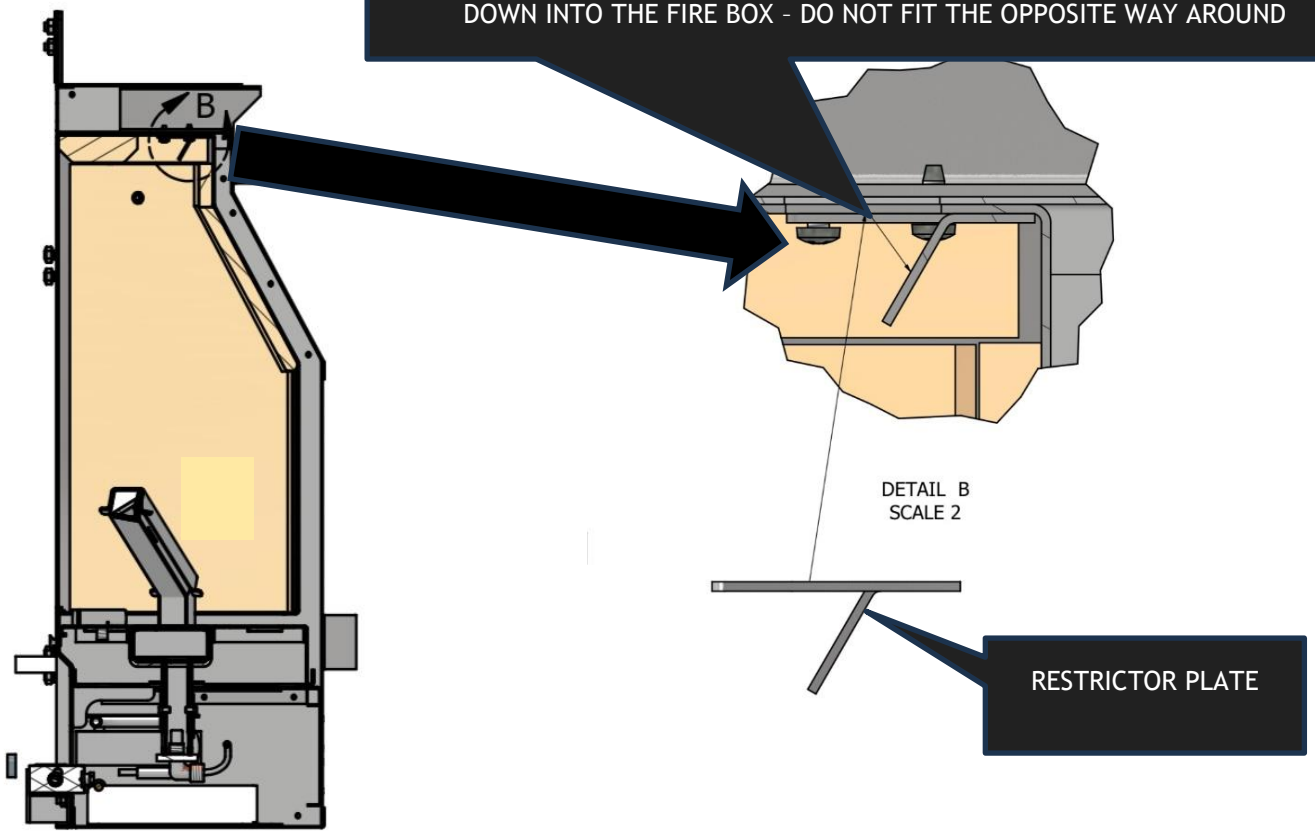

SLIDE CONTROL VERSION SHOWN

FLUE RESTRICTOR PLATE FITTED IN THE MAXIMUM CLOSED POSITION

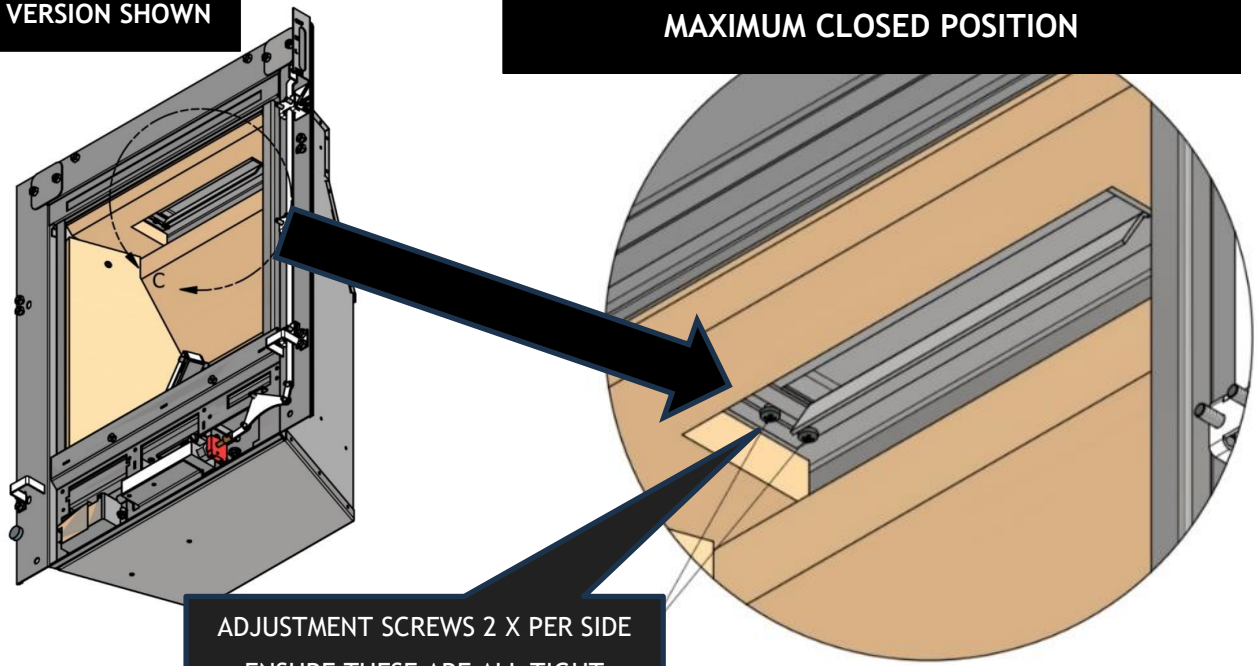

RESTRICTOR SHOWN AT MAX CLOSED POSITION
TO ADJUST, LOOSEN 4 SCREWS
AND SLIDE RESTRICTOR TOWARDS
REAR OF FIREBOX AND RE-TIGHTEN SCREWS

PREPARING THE FIREPLACE OPENING

FIREPLACE OPENING:

This fire is suitable for fitting into non-combustible fireplace back panels with a temperature rating of at *least 150* ˚C (This is also known as CLASS"O" - If in doubt please contact the supplier of the back panel to check suitability. It is recommended that the back panel be constructed of 3 sections with joints across the upper level of the fireplace section to allow for expansion and contraction. The installation of this appliance into an unsuitable back panel, where this component subsequently cracks, will not be deemed to be a fault of the appliance.
The fireplace opening must be between 410mm (minimum) and 450mm (maximum) wide and between 555mm (minimum) and 570mm (maximum) high. If the opening intended for the appliance is in excess of these dimensions then a suitable surround must be constructed of non-combustible material to produce an opening within this range of dimensions.

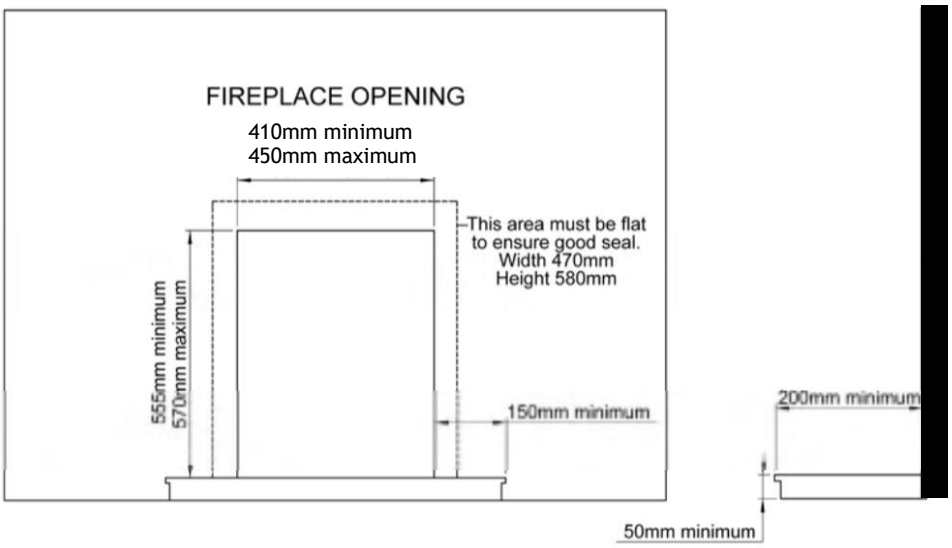

A flat face of a minimum 470mm wide and 580mm high must be provided around the fireplace opening to ensure a good seal is formed. In addition it is important to ensure that the base of the fireplace opening is flat and level with the hearth surface to ensure a secure and aligned installation of the appliance. The minimum hearth dimensions are shown in the diagram above. The upper surface of the hearth must be a minimum of 50mm above the floor and should ideally protrude a minimum distance of 200mm (ideally 300mm) out from the fireplace opening. (This is to provide a physical barrier for the appliance and its' occupants. If the appliance is sitting at least 50mm above the floor level then no hearth is actually required however this is a recommendation only to provide this recommended physical barrier).

INSTALLATION INTO A BRICK CHIMNEY

When the appliance is being installed into a brick chimney there must be sufficient depth behind the appliance to accommodate any falling debris. This debris collection void should be capable of accommodating up to twelve (12) litres of volumetric space. The appliance will require a debris collection space behind the firebox of 25mm to achieve this. On this appliance these are 2 spacers fitted to the rear of the fire box to ensure this happens

INSTALLATION INTO A PREFABRICATED TWIN WALL METAL FLUE BOX

This appliance can be installed into a prefabricated metal twin wall flue box providing it complies to the requirements of BS715 / BS EN 1856-2. The box must have an insulated flue with a minimum diameter of 125mm (5") diameter and a minimum effective overall height of 3 metres. Please refer to fitting a flue restrictor into the flue box
The top outer face of the flue box should be insulated to prevent heat loss with a layer of mineral wool insulation or similar. The metal flue box (to BS715) must stand on a non-combustible surface with a minimum thickness of 12mm.

CHECKING THE FLUE

Use a smoke pellet prior to the appliance installation to ensure the viability of the flue and check that the smoke can be seen being emitted from the terminal / chimney pot outside. There must be no leakage of smoke through the structure of the chimney/flue during or after the smoke pellet test and it is important to check inside upstairs rooms adjacent to the chimney / flue. Check the chimney pot / terminal and general condition of the brickwork or masonry. If the chimney or flue is in poor condition or if there is no up-draught do not proceed with the installation. If there is a history of down-draught conditions with the chimney / flue, the installation of a tested and certified flue terminal or cowl suitable for the relevant flue type should be fitted.
A spillage test must be performed—refer to previous page for these instructions.

FIXING & SEALING THE APPLIANCE IN THE FIRE PLACE

This appliance is best installed with the cable fitting system which is supplied in the standard fitting pack. The fitting system comprises four (4x) eyebolts & rawplugs, two (2x) fixing cables, two (2x) screwed nipples and two (2x) threaded adjuster fittings. This installation requires that the burner tray is removed from the firebox. Remove the screws securing the burner tray to the firebox and set the tray aside during the firebox installation.

Simply drill and fit the eyebolts in the positions shown in the diagram. Then thread the fixing cables through the two cable retainers at the top/rear of the appliance, pass each cable through two of the eyelets then back through one of the two bottom holes at the rear of the appliance. Thread the cable through the adjuster fitting. When the appliance is in its installed position, pull the cables tight and slide the adjuster to the back of the fire—ensuring the back-nut on the adjuster has been run as far up the thread as possible to the hexagon shoulder. Keeping the cable tight, fit the screwed nipple to the cable and secure. Turn the back-nut on the adjuster fixing and the cable will be tensioned until the appliance is securely fixed. This fire box has 2 spacers at the back to keep it 25mm off the back wall, there is also a removable inspection plate that can be removed from the inside at the bottom (only when the burner assembly has been removed) so you can see if there is any build up in the 25mm space over time

FIT THE SELF-ADHESIVE HIGH-TEMPERATURE ROPE SEAL AROUND THE INSIDE OF THE FLANGE PLATE ON THE FIRE BOX SO WHEN THE FIRE IS FITTED INTO OPENING THE FRONT PLATE IS FULLY SEALED - REFER TO DIAGRAM ON THE NEXT PAGE

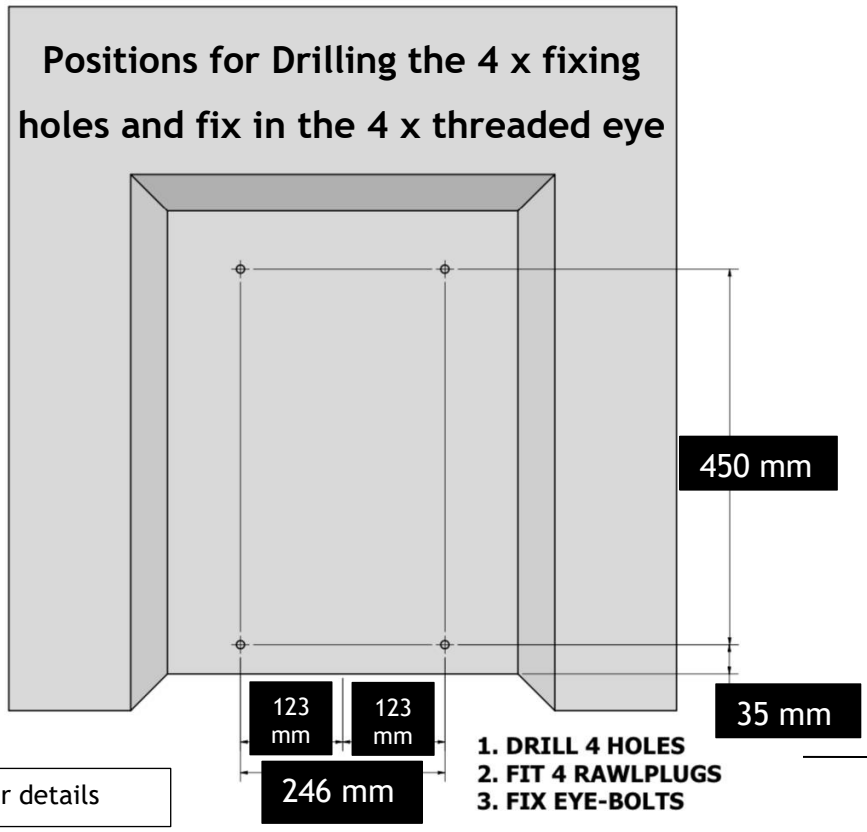

See overleaf for further details

CABLE FIXING SYSTEM (SUPPLIED AS STANDARD) – CONTINUED

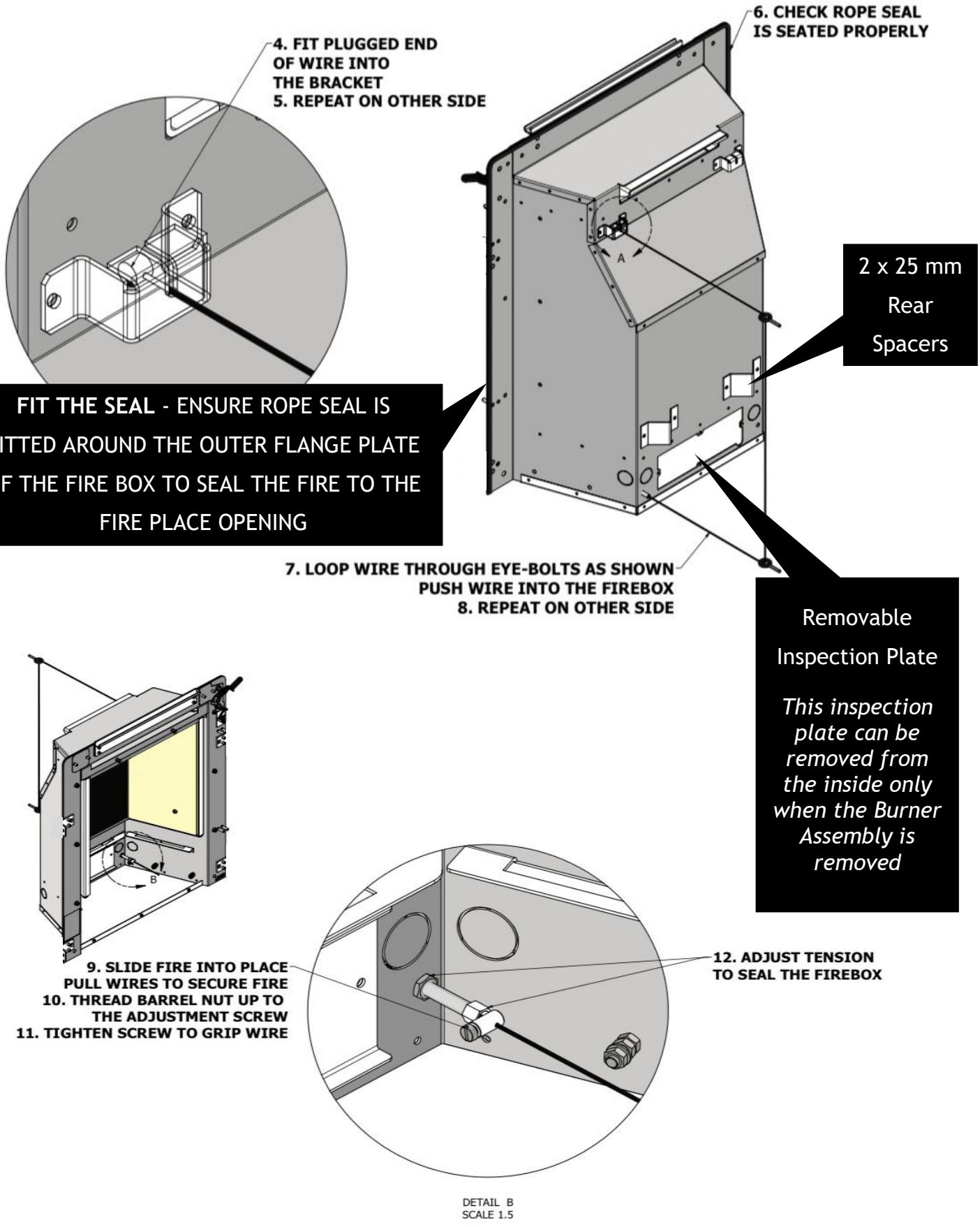

SPILLAGE MONITORING SYSTEM (ODS Pilot)

This appliance is fitted with an atmospheric sensing system in the form of an oxygen sensing pilot burner. This is designed to shut the fire off in the event of products being spilled into the room where the fire is being operated. It is important to note that this spillage monitoring device should not be disabled or be adjusted by the installer. If the spillage monitoring device (O.D.S pilot) is replaced it must only be exchanged with a suitable component which is supplied by Leaf Stoves

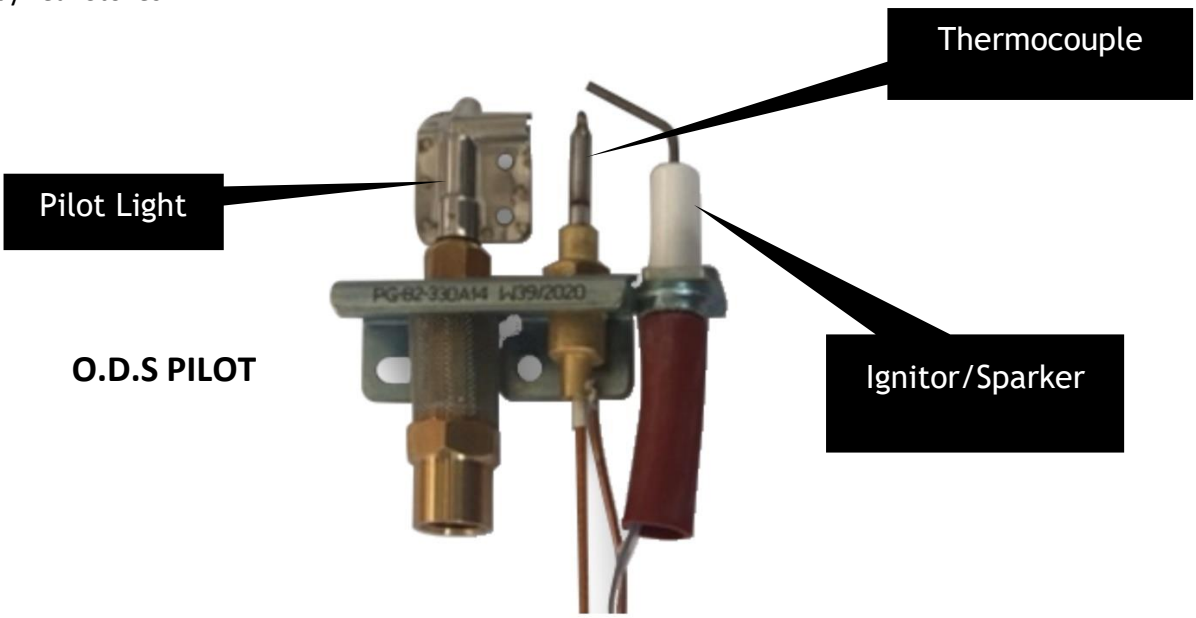

COMBUSTIBLE SHELF

This appliance may be fitted below a surround with a combustible shelf providing the following dimensional criteria is met: There must be a minimum distance of 250mm from the top of the appliance to the underside of the shelf. The shelf must not project more than 150mm from the mounting surface of the appliance into the room. If the shelf projects more than 150mm then the distance between the top of the appliance and the underside of the shelf must be increased accordingly; for every 10mm of projection above 150mm the distance between the fire and shelf must be increased by 20mm

DISTANCE COMBUSTIBLE SHELF COMES OUT FROM THE WALL	MINIMUM DISTANCE BETWEEN THE TOP OF THE FIRE SURROUND AND THE UNDERSIDE OF THE COMBUSTIBLE SHELF
150mm	250mm
160mm	270mm
170mm	290mm
180mm	310mm
190mm	330mm
200mm	350mm

REMOVAL OF THE FRONT GLASS

STEP 1 - REMOVAL OF THE FRONT GLASS PANEL - SCREWS

UNSCREW M5 SCREWS FROM BOTTOM OF FRAME AND REMOVE. KEEP SCREWS SAFE.

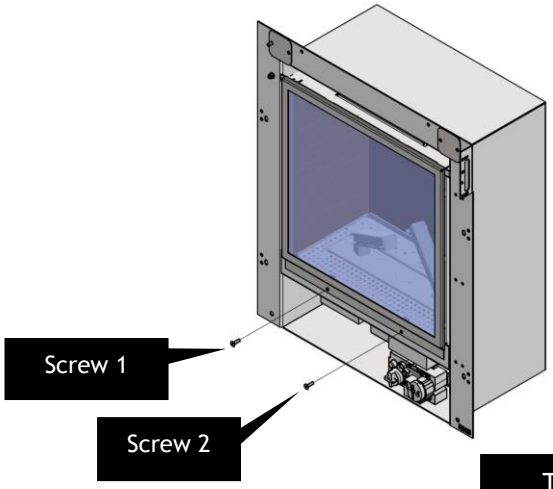

STEP 2 - REMOVAL OF THE FRONT GLASS PANEL. - FRAME

LIFT GLASS FRAME UP UNTIL GLASS FRAME LIP CLEARS THE BODY VENT LIP. MOVE FRAME FORWARDS TO REMOVE FROM MAIN BODY AND STORE SAFELY.

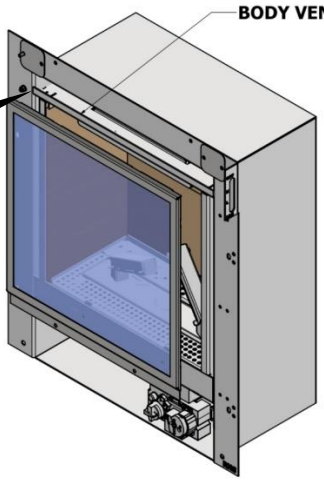

TOP OF GLASS FRAME HOOKS ON THE TOP OF THE FIRE BODY HERE

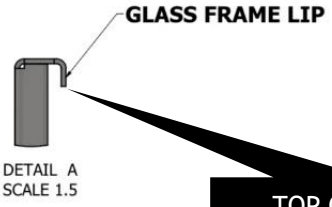

TOP OF GLASS FRAME HOOKS ON THE TOP OF THE FIRE BODY

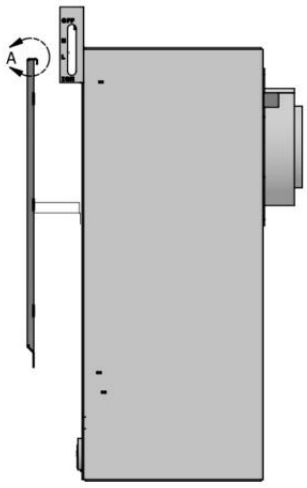

SIDE VIEW

TO REFIT THE GLASS FRAME JUST DO THE ABOVE STEPS IN REVERSE MAKING SURE THE ROPE SEAL AROUND THE GLASS IS INTACT AND FULLY SEALING - PLEASE SEE NEXT PAGE

PLEASE NOTE THE DRAWINGS ARE FOR ALL ASPEN MODELS CONVENTIONAL FLUE AND BALANCED FLUE REMOTE OR SLIDE CONTROL

INSTALLATION (REFITTING) OF THE FRONT GLASS PANEL.

- Before replacing the glass ensure that the seal around the top and two sides of the firebox is in good condition and is securely affixed to the glass panel.
- If the seal is damaged or loose then it should be replaced / re-affixed before the glass is replaced.
- Ensure there are no finger prints or marks on the inside or outside of the glass, otherwise these can be burned into the glass with the heat when the stove is turned on
- This seal is important and if damaged, the appliance should not be operated.
- The glass (ceramic) panel should be undamaged. If the glass panel is broken or cracked it should not be used. Contact Leaf Stoves for a replacement item before continuing.
- Replace the glass panel into position by hooking the frame onto the top of the body, making sure it is equally spaced in the window opening and fully covering the aperture opening and lining up with the 2 x screw holes at the bottom
- Whilst holding the glass fame at the bottom, push the glass frame fully onto the stove body making sure the glass seal is intact and giving a good seal all of the way around the body of the stove aperture and then replace the 2 screws at the bottom
- Ensure the 2 x M5 screws are finger tight plus a quarter of a turn and making a 100% seal but the screws are not over tightened otherwise they could break the glass
- Please check that the glass panel is equally fitting in the frame and is fully covering the aperture opening and undertake a seal test once the fire is lit and burning to ensure nothing can escape from the front of the glass

IMPORTANT NOTE:

GENTLY TIGHTEN UP THE 2 X SCREWS EQUALLY AROUND THE FRAME, ALL THESE FIXINGS ONLY NEED TO BE FINGER TIGHT PLUS ½ A TURN, DO NOT OVER TIGHTEN THESE FIXING OTHERWISE POTENTIALLY YOU COULD BREAK THE GLASS

FITTING THE CERAMICS (LOGS & SHALE)

NOW THE ALL CERAMICS (LOGS & SHALE) CAN BE INSTALLED, AND ARRANGED CORRECTLY OR REMOVED FOR SERVICE. CORRECT INSTALLATION OF CERAMICS IS VERY IMPORTANT TO THE FLAME PICTURE AND PERFORMANCE OF THE FIRE AS FULLY DETAILED IN THIS MANUAL

REMOVING THE BURNER FROM THE FIRE BOX FOR INITIAL INSTALLATION & SERVICING

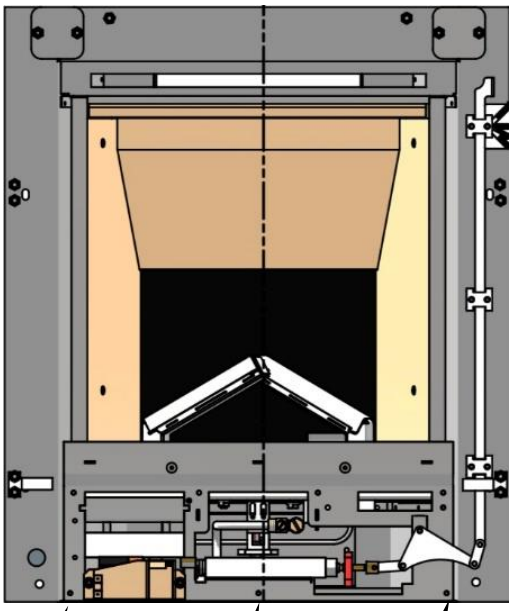

STEP 1

Remove the 3 x screws from the front base of the assembly as per the diagram

SLIDE CONTROL VERSION SHOWN

Control Lever for:
Start/Ignite
Stop/OFF
Low Heat
High Heat
See label below

Screw 1

Screw 2

Screw 3

STEP 2

The complete burner assembly can then be slid out, dependant on the connection of gas supply pipe

To refit the burner assembly just reverse these operations

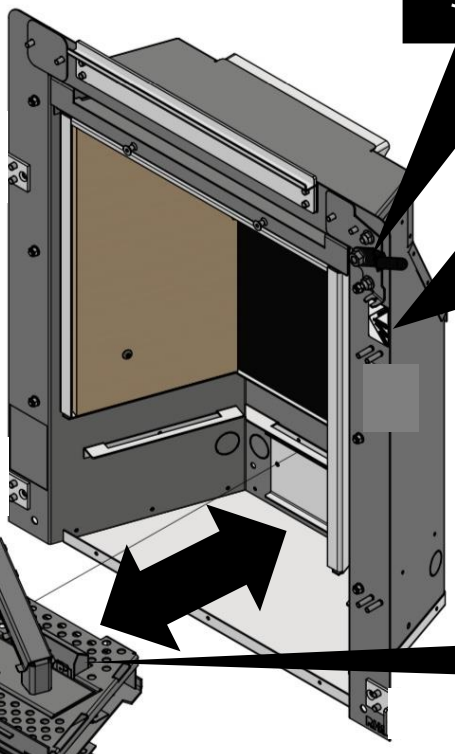

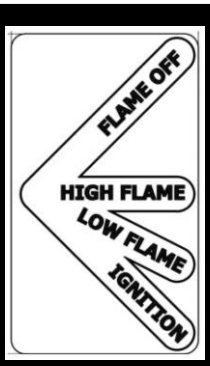

Refer to label on the stove frame for instruction on how operate this fire

9v Battery Holder & Spark Generator

Pilot Assembly & Pilot Sheild Cover

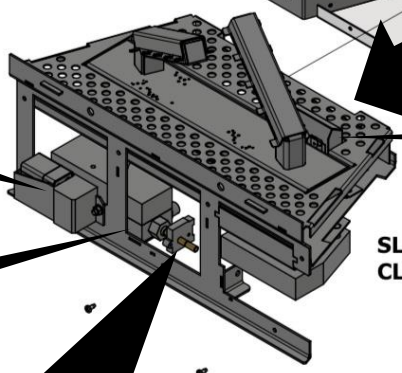

SLIDE BURNER FORWARD UNTIL CLEAR OF FIREBOX

Gas Slide Valve

Red Block - Spark Igniter

CONNECTING THE APPLIANCE TO THE GAS SUPPLY

The gas supply can be connected to the appliance by a concealed fitting from the rear. In all installations conditions the gas connection should be provided using 8mm (O/D) copper tubing onto the 8mm flexible pipe fitted to the fire. If the concealed installation method is chosen, there is an entry point at the rear of the appliance. **No soldered joints** should be used with the firebox of the appliance. The blind grommet which is supplied in the standard fitting pack should be used to close up the knock out hole—simply cut a small cross with a sharp knife in the centre of the grommet—this will then seal around the gas pipe to provide a tight seal. There are 4 x knock out holes in the firebox body one on both sides and two at the rear, three have silver taped over to seal them and the rear one is knocked out – blind grommets are included in the fixings pack

UNDER NO CIRCUMSTANCES SHOULD THIS GAS ENTRY HOLE BE LEFT OPEN AND UNSEALED AS THIS CAN RESULT IN FLAME REVERSAL AND CAN CAUSE DAMAGE TO THE APPLIANCE. SHOULD THIS OCCUR THE WARRANTY TO THIS APPLIANCE WILL BE RENDERED VOID. BEFORE CONNECTING THE GAS SUPPLY TO THE APPLIANCE A GAS SOUNDNESS TEST SHOULD BE PERFORMED TO ENSURE THAT THE EXISTING PIPE WORK IN THE PROPERTY IS SOUND.

The burner tray can now be reinstalled into the firebox.

The gas connection should be made to the appliance by the 8mm isolation valve with a test point, this is not supplied with the appliance. If the isolation valve cannot be easily accessed by the customer at the side of the chimney opening, the isolation valve should be fitted at the front of the fire behind the facia panel

Test the operational pressure (inlet gas pressure) of the appliance by attaching a pressure gauge to the test point of the appliance. This connection should take place when the appliance is OFF. Ensure that gas is turned on at the gas meter and purge the air from the appliance by:

SLIDE CONTROL UNITS:

Push down the control lever fully to the bottom position and hold. The spark generator should spark continuously, ensure the spark is being generated correctly at the pilot assembly. Continue with this procedure until the air is purged from the appliance and the pilot is lit. Once lit hold the lever pushed down for up to a further 10 seconds. Once the pilot is established and secure allow the lever to rise to the (LOW HEAT) position then lift the lever to the (HIGH HEAT) position. Allow the appliance to run for a minimum period of 5 minutes. Next check that the inlet pressure to the appliance is 20 mbar ±1 mbar.

Check the operation of the appliance according to these instructions which are detailed on the next page

CHECK THE CLEARANCE OF COMBUSTION PRODUCTS

SPILLAGE TEST: To check for satisfactory clearance of products of combustion, close all doors and windows and leave the appliance burning on HIGH HEAT for five minutes. Insert a lit smoke match just into the gap at the top centre of the fire (see diagram opposite). It is recommended that a smoke match holder be used. All the smoke must be drawn into the flue. If spillage occurs allow a further 5 minutes and repeat the test. If spillage still occurs turn off the appliance and seek expert advice. If an extractor fan is situated in the room the spillage test should be repeated with the fan running. If there is a connecting room with an extractor fan the test should be repeated with all the doors to that room open and the extractor fan running.

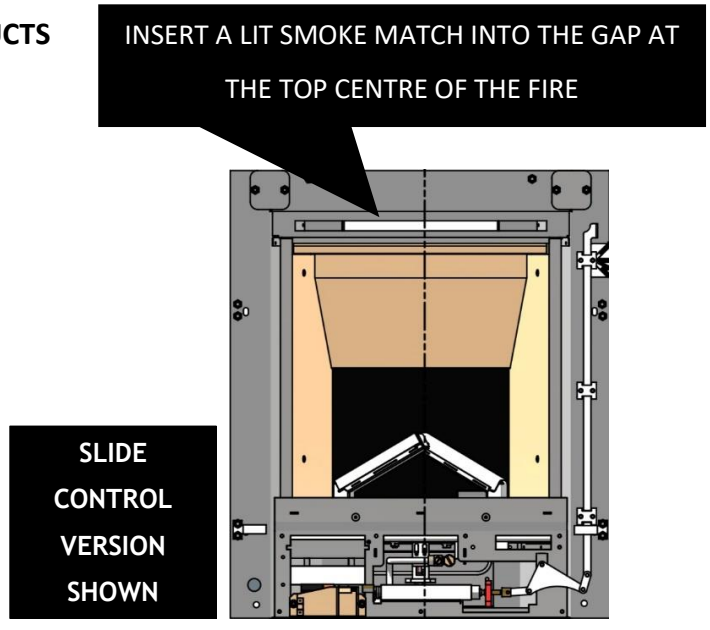

HOW TO OPERATE YOUR ASPEN INSERT FIRE USING THE MANUAL SLIDE VALVE ON THE SIDE VERSION ONLY

Lighting your fire, adjusting the flame (High & Low) & turning off your fire

Please make sure the 9v battery is fitted before attempting to light this fire & the gas is turned on

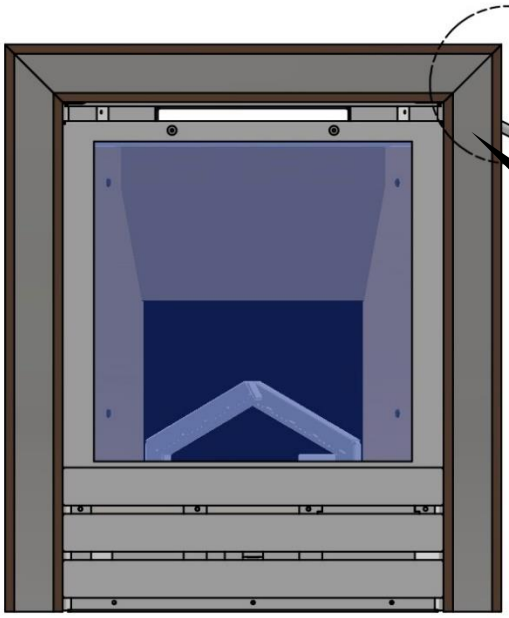

CONTROL LEVER TO:

1 START THE FIRE
2 SET LOW HEAT
3 SET HIGH HEAT
4 TURN OFF THE FIRE

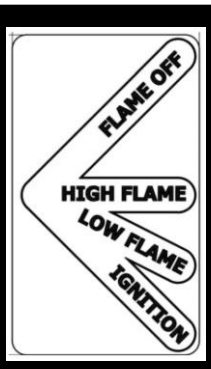

Refer to label on the stove frame for instruction on how operate this fire, this label is located behind the outer 3 sided frame or inside the door on the stove fronted version for reference

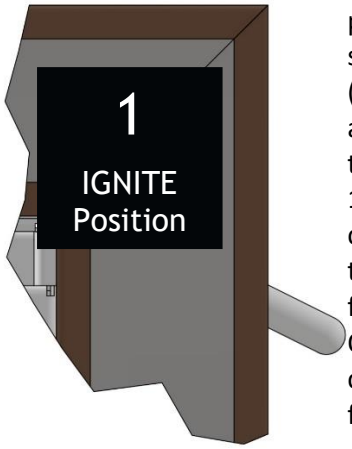

STEP 1 - Push the control lever down fully to the bottom position. The spark generator should cause a repeated spark (sparking noise) at the pilot and the pilot should ignite. If the pilot does not light after 10 seconds then lift the control lever fully upwards to the OFF POSITION (4) and wait for 3 minutes.
Once the pilot is lit keep the control lever pushed down fully for up to 10 seconds.

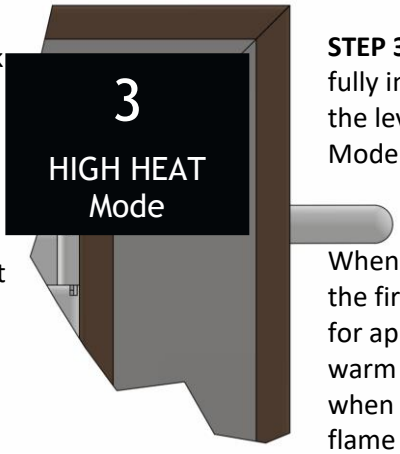

STEP 3 – Once the fire is lit fully in LOW HEAT Mode lift the lever to the HIGH HEAT Mode position.

When first lighting the fire run the fire on HIGH HEAT Mode for approx. 15 minutes to fully warm up the ceramic logs, when the log are warm the flame will turn from a blue flame to a more yellow flame and the ceramic will start to glow red, then you can lower the heat setting if your require

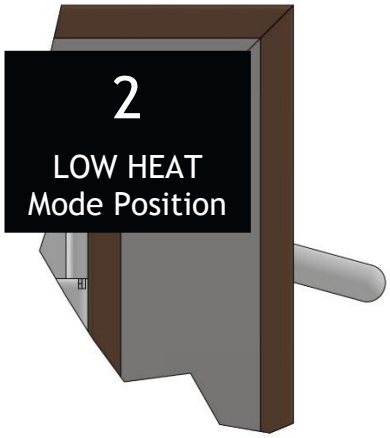

STEP 2 - Now slowly release the lever and it will lift up to the LOW HEAT Position (2), the pilot should remain lit and base burner & the 2 main log burners will also be lit, flames will be coming from under the 2 main logs. This is the LOW HEAT Mode setting. If the pilot goes out, wait for 3 minutes and return to Step 1.

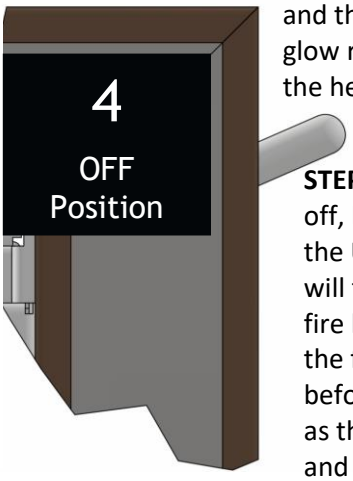

STEP 4 - To turn the fire off, lift the lever fully to the UP Position, the fire will turn off. Make sure the fire has fully shutdown and the flames have gone out before releasing the lever, as the fire bed will be HOT and if you lower the lever the fire could restart.

HOW TO OPERATE YOUR ASPEN INSERT FIRE USING THE REMOTE CONTROL VERSION ONLY

DO NOT USE RECHARGEABLE BATTERIES IN THIS STOVE – WE RECOMMEND YOU USE DURACELL or ENERGIZER ALKALINE BATTERIES ONLY

Batteries – Remote Control handset – *comes fitted in the remote*

- 1 x 9 V (Alkaline Duracell recommended). – initially supplied with the stove
- Battery replacement is recommended after 12 months maximum

Batteries – Receiver (Stove Controller) – 4 x AA Battery Pack – *supplied loose inside the stove*

The stove is fitted with a simple lift out battery pack located in the slot at the bottom of the stove in the front of the sump guard – Fully detailed later in this manual – therefore do not attempt to fit batteries into the actual Mertik black receiver unit (which is fitted at the bottom of the stove body inside the sump guard behind the cover plate), as this will cause permanent damage and void your warranty

- 4 x 1.5 V "AA" required (Alkaline Duracell/Energizer recommended).- initially supplied with the stove
- An AC Mains Adapter may be used instead of batteries – Option Extra
- If NOT USING a mains adapter, battery replacement is recommended at the beginning of each heating season. Which are fitted into the front removable Battery pack under the stove

NOTICE
Only the Leaf approved - AC Mains Adapter can be used. Use of other adaptors can render the system inoperable and cause permanent damage which is not covered by the warranty

Remote Control

Display on the Remote Control explained

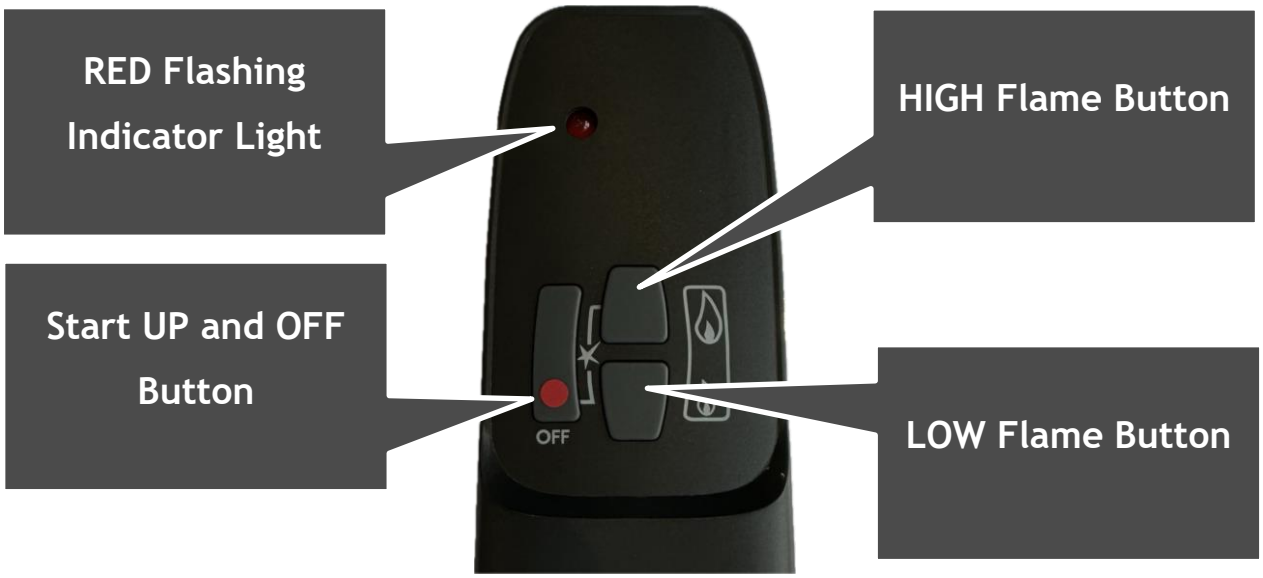

Remote Control - Operating Instructions

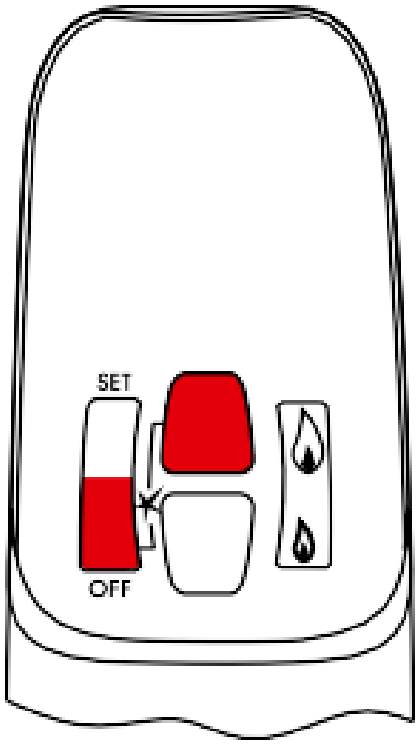

Turning the Stove ON

- Simultaneously press the **OFF** and 🔥 (large flame) buttons until a short beep confirms the start sequence has begun; release buttons.
- Continuing beeps confirm the ignition is in process.
- Once pilot ignition is confirmed, the burner will light

Initially the stove will go into High Flame Mode (Maximum Heat Output) leave it in this mode for a minimum of 10 minutes so the stove and flue can fully heat up before adjusting the flame down.

Initially the flame will be Blue, once Hot the flame will turn Yellow and the Logs will start to glow Red at the bottom of the logs

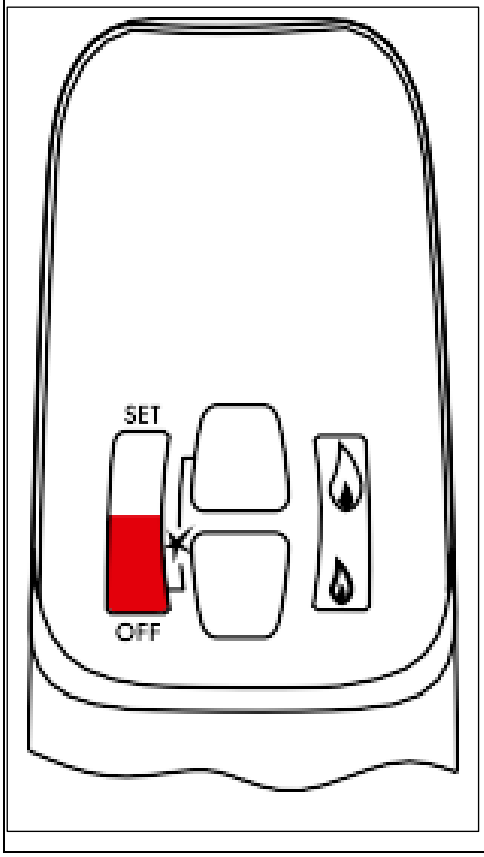

Turning OFF the Stove

- Press just the **OFF** button.

THIS WILL FULLY TURN THE STOVE OFF

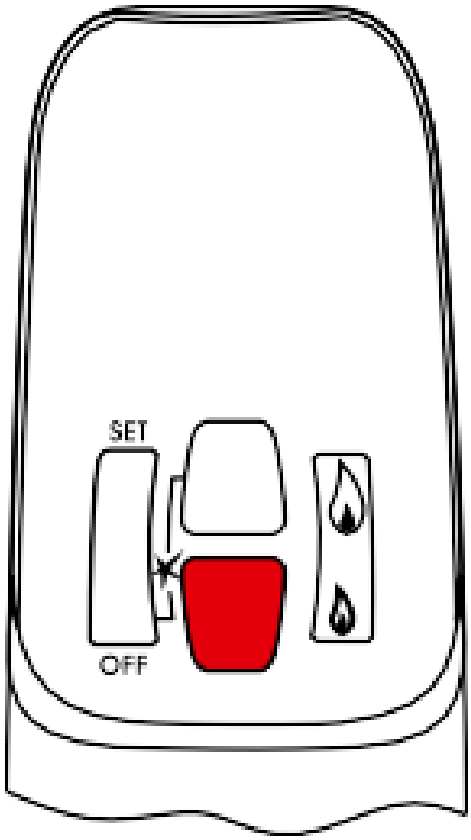

Flame Height Adjustment – Setting the Low Flame - Minimum Heat Output

- Press and hold (small flame) button to decrease flame height or to set appliance at Pilot Flame only Mode which is known as **Standby Mode.**
- For fine adjustment tap the (large flame) or (small flame) buttons

Putting the Stove into Standby Mode (Pilot Flame Only)

- Press & Hold (small flame button) to set appliance at Pilot Flame only (Standby Mode) the flames will go out on the burner

Once into Standby Mode the burner flame will go out but the Pilot Light will stay on

We recommend leaving the stove in Standby Mode during the heating season as this will keep help to keep the chill off the Flue and the Room, it then allows quick lighting of the burner when required and reduces the wear & tear on the valve and thermocouple

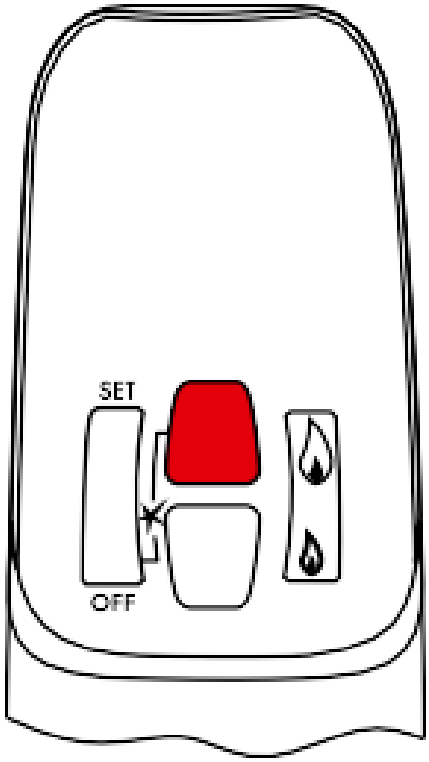

Flame Height Adjustment – Setting the High Flame - Maximum Heat Output

When in Standby Mode: Press and Hold (large flame) button the burner will automatically light and keep holding the button to increase the flame height



Quick Approach to Setting the Stove into LOW Flame mode

- Double-click (small flame) button.
- **Note:** At start up of the stove the flame goes to high flame first before going to designated low flame

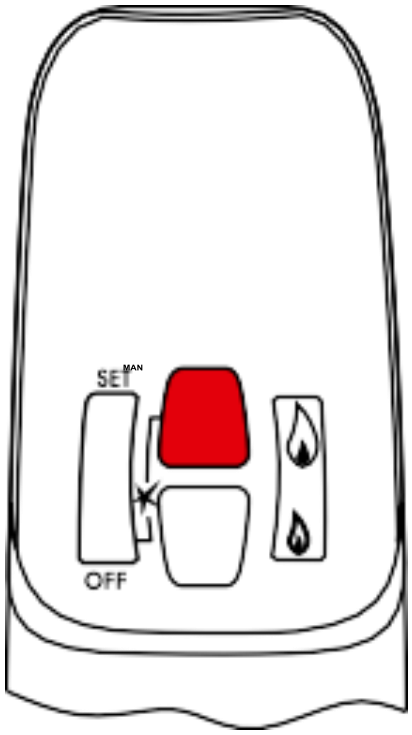

Quick Approach to Setting the Stove into HIGH Flame mode

- Double-click (large flame) button. Flame automatically goes to High Flame.

Cleaning and Maintenance

This appliance should be inspected and serviced once a year by a qualified, competent and Gas Safe registered person. The inspection and maintenance must at least ensure that the appliance is working correctly and safely.

It is advisable to clean the appliance of any dust and debris before the heating season and especially if the appliance has not been used for some time. This can be done with a soft brush and a vacuum cleaner or a damp cloth and if required a non-abrasive cleaning agent. Do not use corrosive or abrasive substances to clean the appliance.

Battery Pack / Mains Adapter Location – Changing the Batteries

This stove can be operated by battery pack (supplied) or connected to the 240v mains supply via the Leaf approved mains adapter (optional extra)

As standard, the stove comes fitted with the removable battery pack. The battery pack is located under the stove below the black electronic receiver control box, the battery pack sits on a small metal shelf

When you need to replace the batteries, gently pull the battery box from shelf, it is on a short lead with a jack plug connector. Do not disconnect battery box from the receiver control box just gently pull it forward in front of the stove, then open it up and replace the 4 x AA batteries. Then, replace the battery box back on the shelf again

If you want to run the stove on the mains adapter rather than a battery pack disconnect the battery pack completely from the receiver control box and then plug the mains adapter lead into the jack plug socket in the receiver control box and then plug the mains adapter into a local 240v wall socket. You cannot run the stove with a battery pack and a mains adapter together. It can only be run on one or the other

PLEASE NOTE:

DO NOT PLACE BATTERIES INSIDE THE RECEIVER CONTROL BOX, IF THE EXTERNAL BATTERY PACK OR THE MAINS ADAPTER IS BEING USED - AS THIS WILL PERMANENTLY DAMAGE THE RECEIVER CONTROL BOX. THIS IS NOT COVERED BY THE WARRANTY

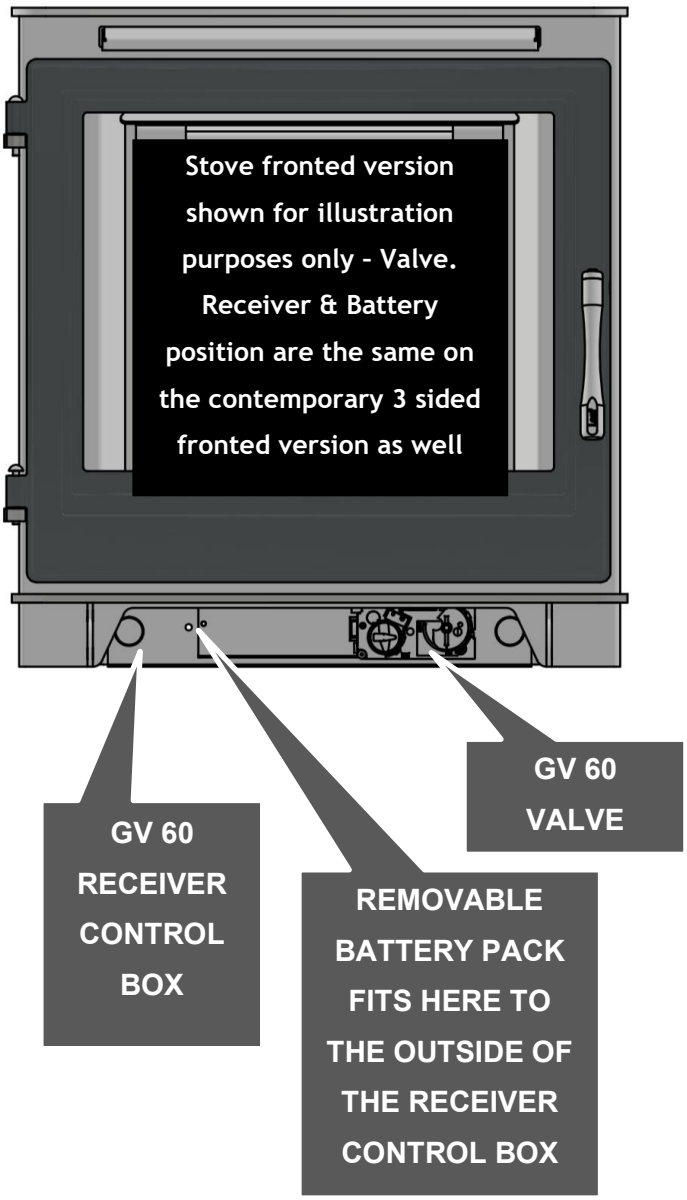



Removable Battery Box

Stove fronted version shown for illustration purposes only - Valve. Receiver & Battery position are the same on the contemporary 3 sided fronted version as well

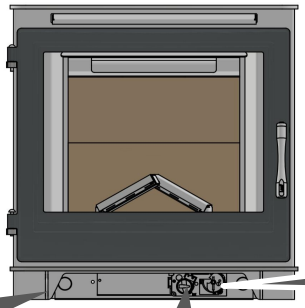

REFERENCE FOR GAS SAFE ENGINEER ONLY - SHOWING THE POSITION OF THE REMOTE VERSION ONLY - GV60 VALVE & RECEIVER CONTROL BOX

GV 60 Valve

GV 60 - Ensure the Master ON/Off switch is in the ON Position on the valve (IF FITTED)

MAXITOL MERTIK Receiver Control Box - Position

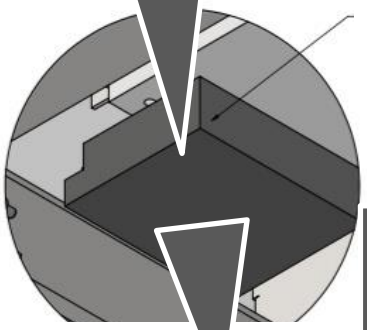

GV 60 VALVE EXPLODED VIEWS

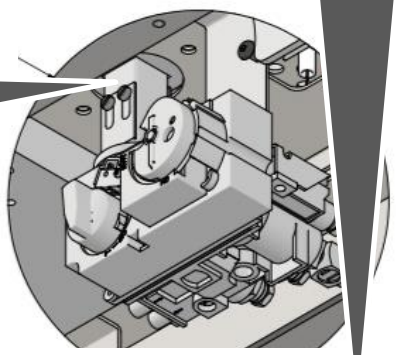

DO NOT PUT 4 X AA BATTERIES IN THIS RECEIVER BOX – ONLY USE THE EXTERNAL BATTERY PACK



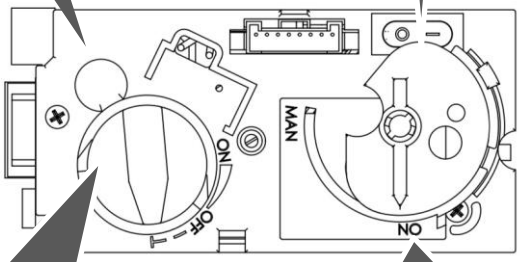

MAXITOL MERTIK Receiver Control Box

DO NOT TOUCH THIS CONTROL KNOB AS IT IS FULLY CONTROLLED BY THE REMOTE CONTROL - ROTATING IT MANUALLY WILL DAMAGE IT

ENSURE THE SELECTOR SWITCH IS IN THE ON POSITION ONLY AND CLICKED INTO PLACE



FIRST TIME USE ONLY – PAIRING THE REMOTE HANDSET TO THE RECEIVER CONTROLLER BOX.

Gently Press & Hold the receiver's reset button until you hear two (2) beeps. After the second, longer beep, release the reset button. Within 20 seconds press the (small flame/down) button on the handset. You will then hear two (2) short beeps to confirm the Pairing has set correctly. If you hear one long beep, this this indicates the Pairing learning sequence has failed or the wiring is incorrect. Please check the wiring and battery connections and then retry

Please NOTE: This Pairing is a one time setting only, and it is not required after changing the batteries in the handset or receiver.

FITTING THE WOOD BURNING FRONT FASCIA ONLY

PLEASE NOTE:

THE CONTEMPORARY - 3 SIDE FRAMES ARE JUST HELD ONTO THE FIRE BOX FLANGE WITH MAGENETS SUPPLIED

WHEN FIRE HAS BEEN FITTED AND SECURED UNPACK THE STOVE FRONT FASCIA

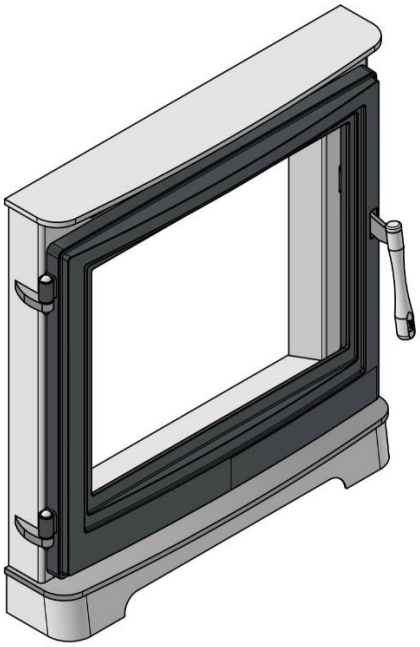

STEP 1

OPEN DOOR AND SUPPORT IT. REMOVE HINGES.

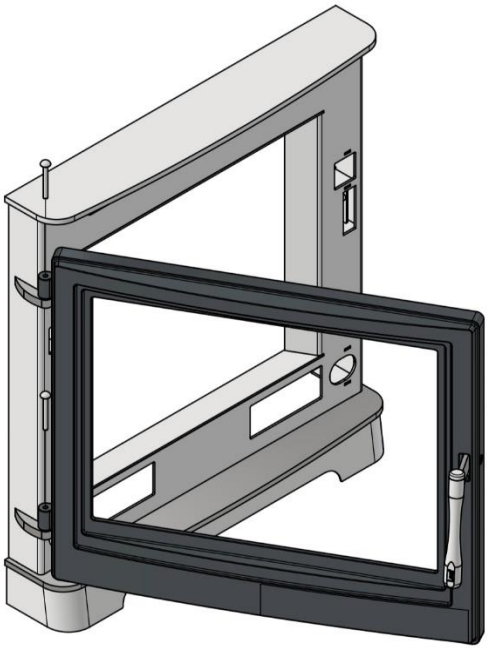

STEP 2

MOVE DOOR AWAY FROM FASCIA. STORE DOOR IN SAFE AREA.

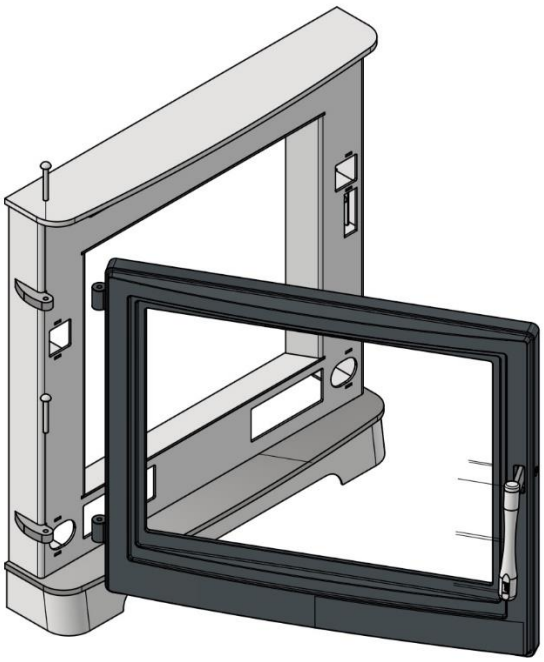

STEP 3

**PULL BOTTOM COVER STRIP AWAY FROM BOTTOM OF THE FASCIA.
LOCATE MAGNETS AT EACH SIDE
STORE IN A SAFE AREA.**

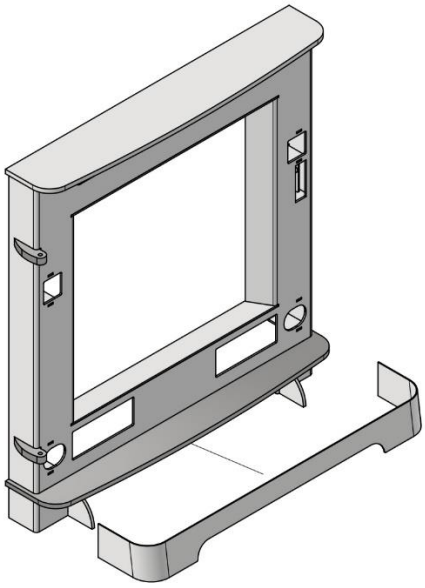

STEP 4

LIFT TOP COVER STRIP UP AND AWAY FROM THE FASCIA AND STORE IN A SAFE AREA

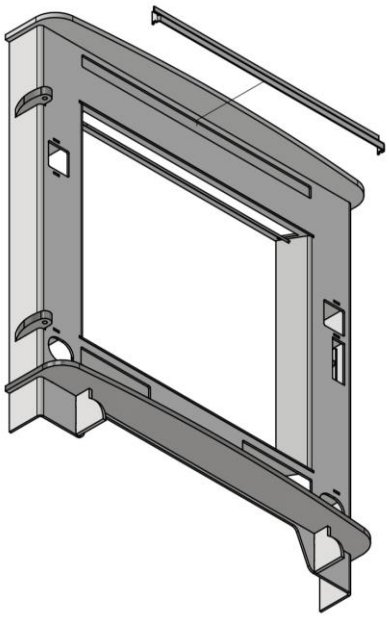

STEP 5

OFFER FASCIA UP TO THE FRONT OF THE FIRE AND ALIGN THE FIXING BRACKETS AROUND M6 STUDS P1 TO P10

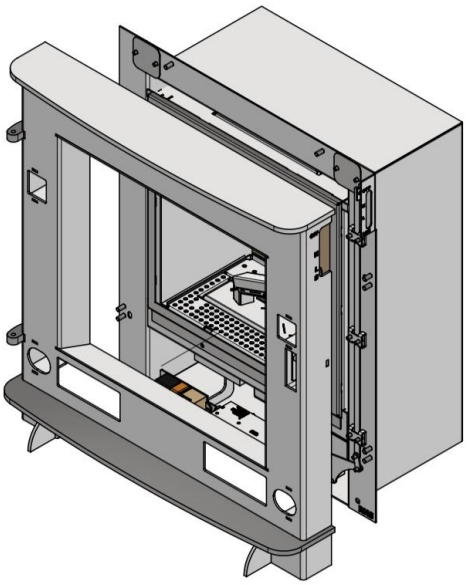

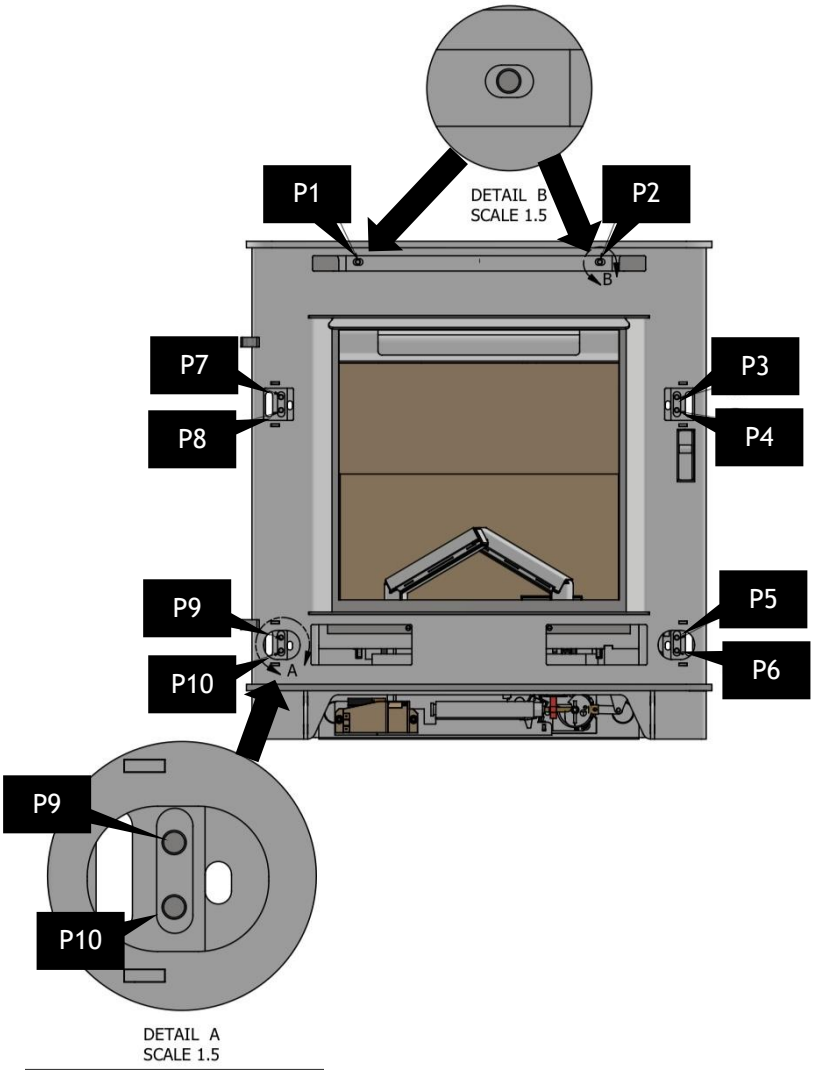

STEP 6

FIT WASHER & NUTS TO ALL STUDS AND TIGHTEN TO SECURE

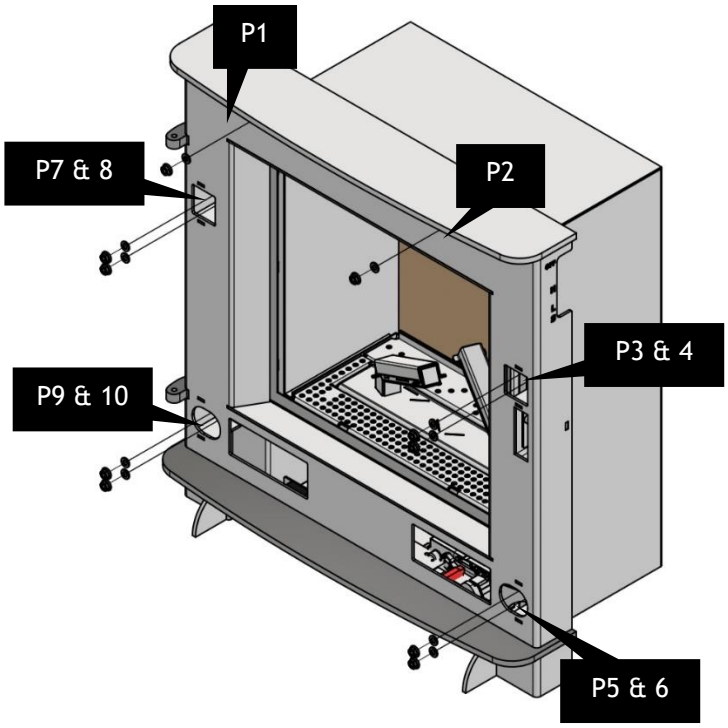

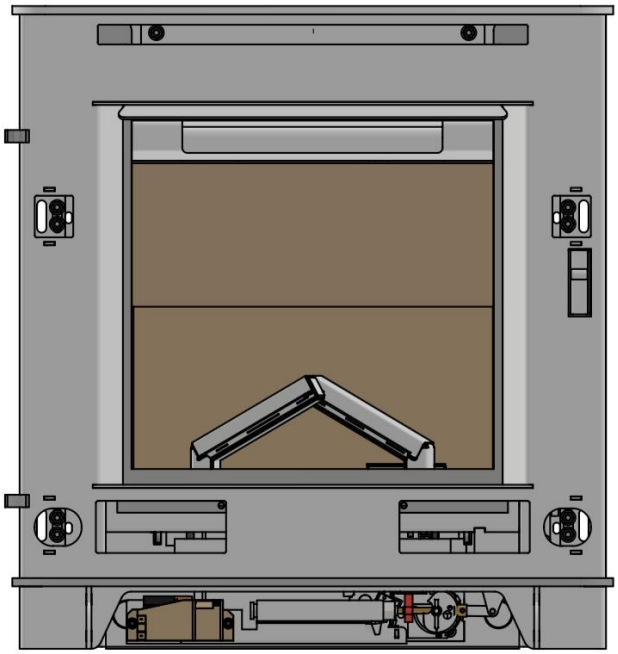

STEP 7

RE-FIT COVER STRIP BY RESTING THE SADDLE POINT ON THE VENT OPENING

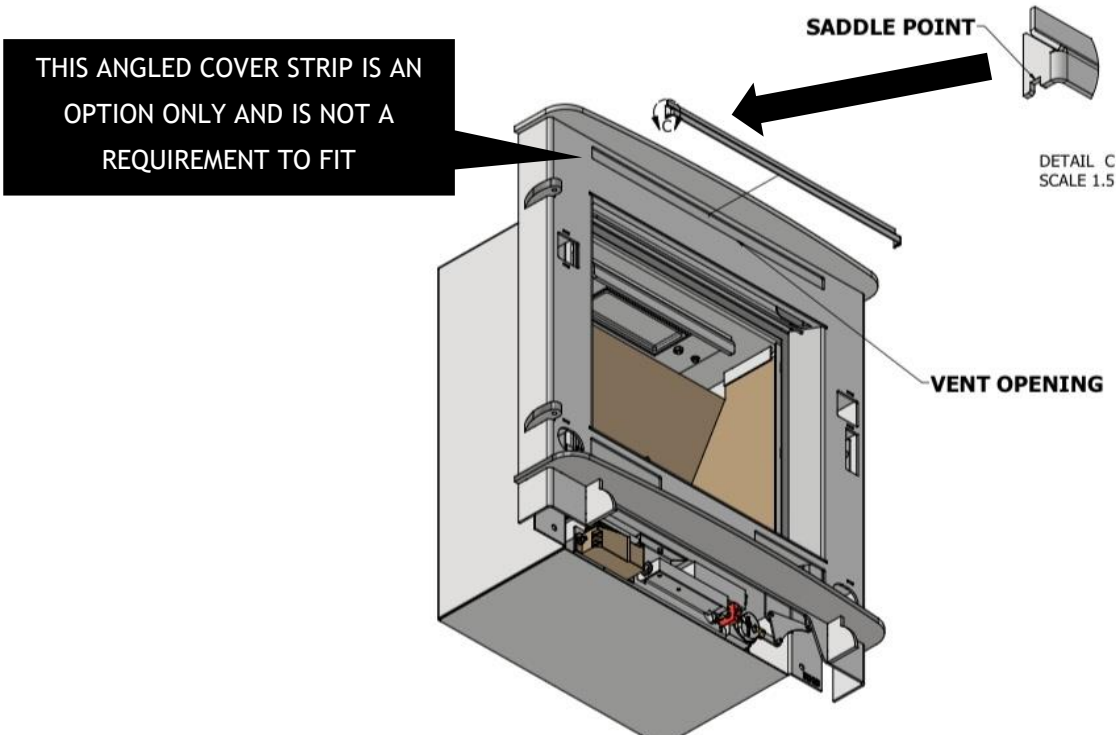

STEP 8

SUPPORT THE DOOR AND RE-FIT THE HINGES. CLOSE AND LOCK THE DOOR.

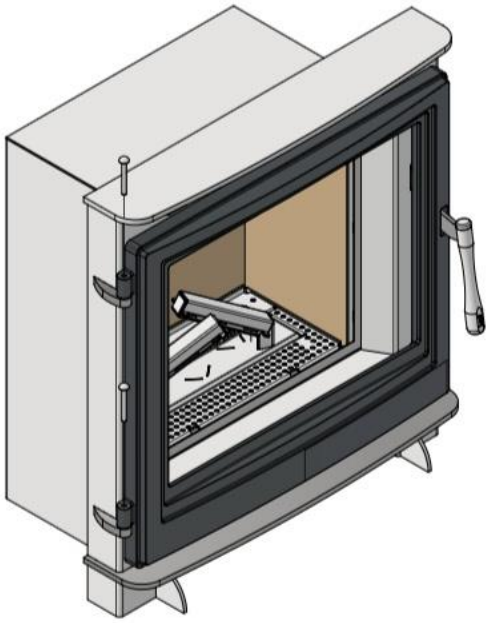

STEP 9

RE-FIT THE BOTTOM COVER USING MAGNETS

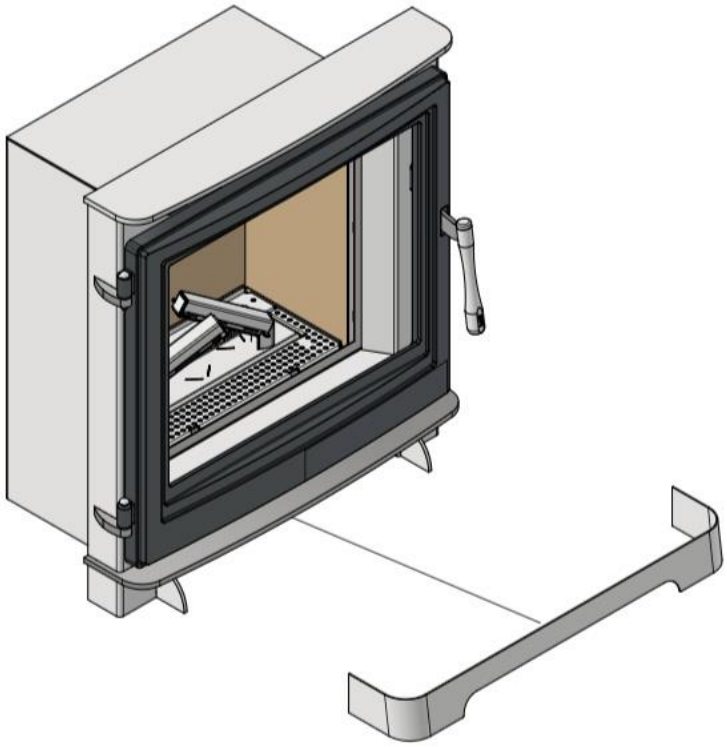

STOVE FRONT NOW FULLY FITTED

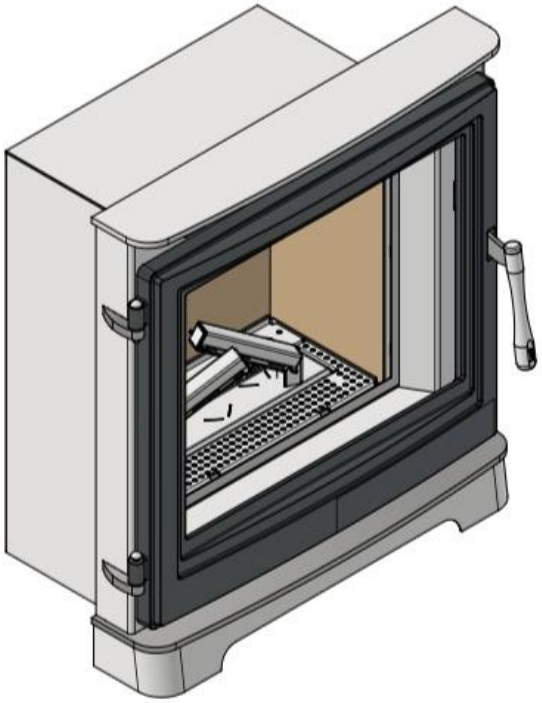

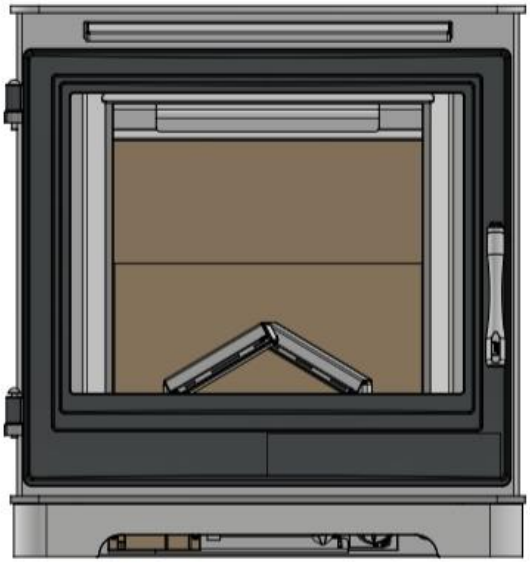

FITTING A NEW 9V BATTERY

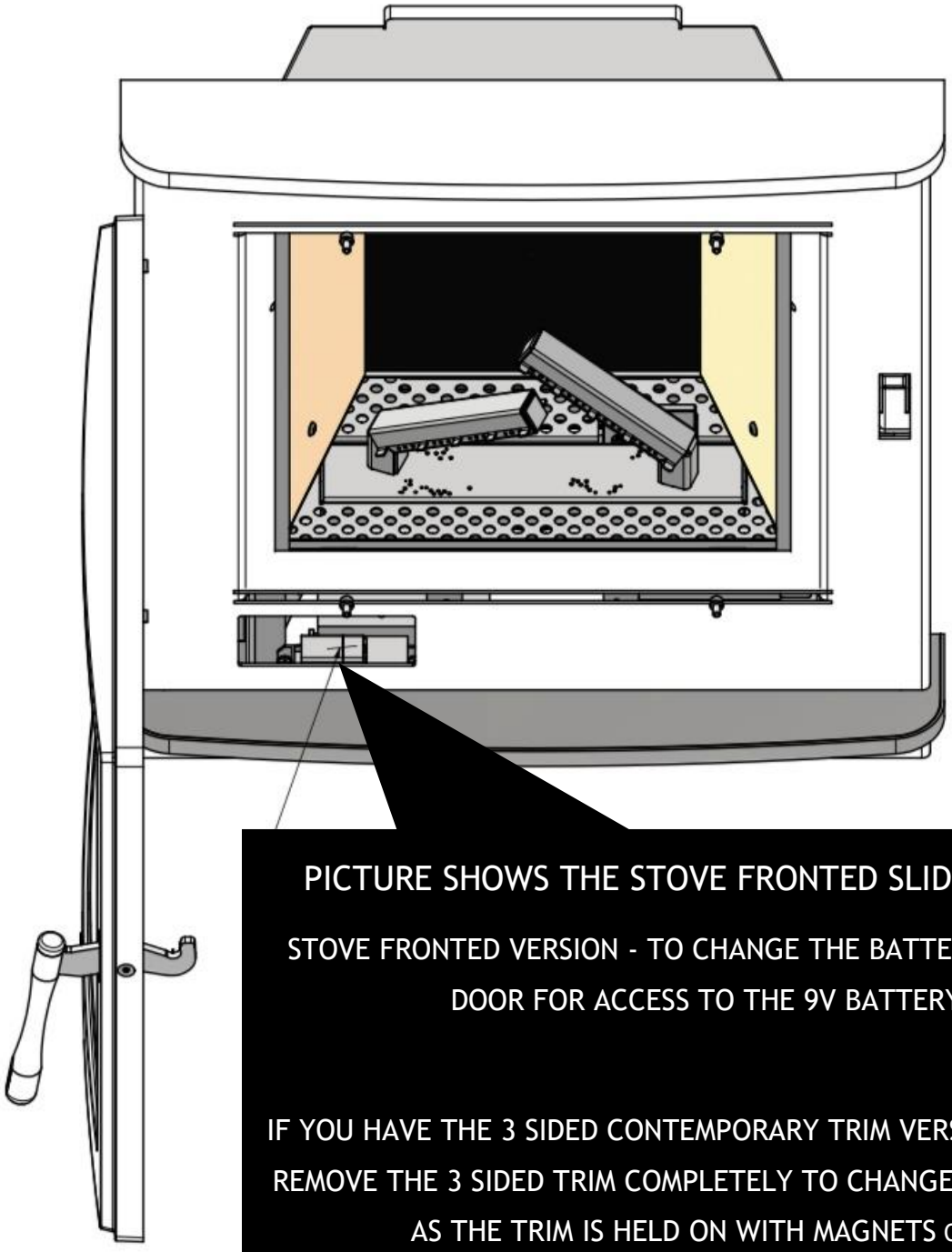

PICTURE SHOWS THE STOVE FRONTED SLIDE VERSION

STOVE FRONTED VERSION - TO CHANGE THE BATTERY OPEN THE DOOR FOR ACCESS TO THE 9V BATTERY

IF YOU HAVE THE 3 SIDED CONTEMPORARY TRIM VERSION YOU JUST REMOVE THE 3 SIDED TRIM COMPLETELY TO CHANGE THE BATTERY AS THE TRIM IS HELD ON WITH MAGNETS ONLY

FLUE REQUIREMENTS

These checks MUST be made before constructing the Builders Opening
The Appliance is suitable for Installation into the following types of Flue:
a. Conventional Stone/Brick Built Flue (Class 1) with a minimum cross sectional dimension of 175mm (7") with a minimum effective height of 3 meters.
b. The flue **MUST** be free of any obstructions. Any dampers or restrictors **MUST** be removed. Some dampers are impractical to be removed; therefore they **MUST** be fixed in some way in the **OPEN** position.
c. The chimney/flue should be swept if it has been used for solid fuel.
d. A Flue Lined with a 5" Flexible Flue Liner connected to a Register Plate fitted and sealed at the top of the Builders Opening with a minimum effective height of 3 meters.
e. A Pre-cast Flue with Starter Blocks conforming to BS1289: 1975, 1986, or 1989 or BS EN1858 and having a minimum cross sectional flue of 198mm by 67mm and Starter Blocks providing 115mm deep by 304mm wide with a minimum height of 555mm. No part of the Pre-cast Flue must be less than 63mm.
f. The Fire may be used in conjunction with a Fully Sealed Rebated 150 DEGREES C rated or Equivalent Purpose Built Fire Surround.
g. Any Pre-Cast Flue must be Sound and Free from Obstructions (Mortar Fangs or Protrusions into the Flue Way) and have an effective height of over 3 meters.
h. For Pre-cast Flues the walls should be dry-lined over the route of the flue to prevent cracking.
i. A Purpose Designed Flue Box to BS715 fitted with a 5" twin walled flue with a minimum effect height of 3 meters. Details are available from your authorised supplier.
j. Ensure that only one fireplace is served by the flue system.
K. Ensure that the chimney/flue is continuous from inlet to termination.
l. Ensure that the chimney/flue is structurally sound, so that combustion products do NOT come into contact with combustible materials outside the chimney.
m. CHECK FLUE PULL. Apply a smoke match or smoke generator to the flue opening at hearth level and observe smoke.
If there is a definite flow into the flue aperture, proceed with installation. If there is not a definite flow into the flue aperture, preheat the flue for approximately 10 minutes and re-test. If there is not a definite flow towards the flue aperture the flue may need attention.

DO NOT FIT THE APPLIANCE, SEEK EXPERT ADVICE.

VENTILATION

a. No additional purpose provided ventilation is normally required for the fire when installed in the UK; however this **must** be confirmed by the Spillage Test,
b. For other Countries refer to National Regulations and Local Codes.
c. This appliance is fitted with an oxygen depletion sensing system, which automatically shuts off the gas supply to the fire if the oxygen level in the room is depleted, due to lack of primary air, or obstructed flue that would lead to incomplete combustion of the gas. It **must not** be tampered with and only replaced with a genuine Leaf Stoves ODS Pilot.

GAS SUPPLY

It Is Recommended to Check The Next Section as Building Work May Affect the Gas Supply Routing.
a. Carry out a gas soundness test before working on the gas supply.

b. Gas supply provision should be made in accordance with the latest Gas Safety (Installation and Use) Regulations as amended.

c. Confirm that the fire has been supplied for the correct gas to be used by checking the Data Badge in the base of the fire.

d. A route for a concealed gas supply is provided through a hole in the rear or sides of the fire
Your 8mm gas supply pipe needs to protrude through the back of the convector box by approximately 145mm to achieve a neat connection onto the back of the isolator elbow on the burner. (This applies to both Manually Controlled and remote controlled

e. Where the gas supply passes through walls, floors, voids, concrete and wall cavities the supply should be sleeved.

f. Determine the gas supply pipe size required taking into account any other gas appliances.

g. Determine where the gas supply pipe needs to terminate and fit the 8mm compression isolation/pressure test elbow (not provided)

h. In common with all other gas appliances, dirt and debris in the gas system can block the valve and gas injectors on this appliance, and faults caused by this are not covered by the warranty. Therefore it is important that all gas pipes **must** be purged of both air and debris.

i If you suspect that there may still be dirt and/or debris in the gas system, fit a filter in the pipeline, before the gas isolation/pressure test elbow.

J. Do **not** use jointing compound on any compression fittings on the fire. The use of jointing compound on the compression joints on this appliance will possibly invalidate the warranty, as it can get into the control mechanism and cause a malfunction.

k. Seal off the isolation/pressure test elbow and check all gas connections for gas soundness before proceeding to fit the fire.

! IMPORTANT NOTE ! Always reseal the pressure test point and check that it is gas tight.

Cleaning and Maintenance

This appliance should be inspected and serviced once a year by a qualified, competent and Gas Safe registered person. The inspection and maintenance must at least ensure that the appliance is working correctly and safely.

It is advisable to clean the appliance of any dust and debris before the heating season and especially if the appliance has not been used for some time. This can be done with a soft brush and a vacuum cleaner or a damp cloth and if required a non-abrasive cleaning agent. Do not use corrosive or abrasive substances to clean the appliance.

Annual Service

For the Leaf Stoves Warranty to be valid this stove must be services once a year by a Gas Safe Qualified Engineer. After an annual service on this stove please complete the record sheet at the rear of the manual – Detailed requirements of the annual service are detailed in the rear of this manual

2.4 CARE & MAINTENANCE OF THE BATTERIES

WHAT SHOULD YOU DO?

- Replacing the batteries at least every 12 months will help prevent damage to the valve controller battery box and handset through leaking batteries.
- Only use new, high quality, alkaline batteries.
- Do not use rechargeable batteries
- Always replace the complete set of batteries and do not mix brands.
- Keep contacts clean and do not bend.
- Remove batteries from the stove Battery pack & Remote handset if the stove is not going to be used for an extended period which is greater than 12 weeks in duration
- Do not operate fire without battery covers fully in place.
- If handset is dropped and damaged, obtain a replacement (see spares section)

HOW DO YOU KNOW WHEN TO REPLACE THE BATTERIES?

- Replace batteries at least every 12 months, during the annual service of the fire.

WHAT HAPPENS IF I DO NOT REPLACE THE BATTERIES?

- The fire will stop working, or will only work intermittently.
- The batteries may leak and cause permanent, irreversible damage to the electronics meaning a replacement item must be sought (this is not covered by your Leaf Stoves warranty).

HOW TO REPLACE THE BATTERIES.

- The control consists of the remote handset and a Gas Control Valve battery pack, within the fire, which both run on batteries or the mains power adapter
- The Deluxe Remote handset requires 2 x AAA batteries.
- The valve battery box requires 6 x AA batteries (not required if you are the mains power adapter).

2.5 What Comes with My Stove

Packing List - The Following Items are packed with the stove

- A - The 3 x piece log set, 1 x shale pack & 3 x burnt log ends are in the cardboard box
- B – 9v battery (PP9) supplied with the Slide Control Version – picture not shown
- C – Cable wire fitting kit
- D – Brass Test Point and Cutoff Valve
- E – High Temperature seal for around the fire flange plate to seal the fire into the opening
- F - This Installation and Operating Manual



Item A - Box Containing:
1 x LH Log
1 x RH Log
1 x Centre Log
1 x Bag Shale
3 x Burnt Log Ends



Item C - Cable wire fitting kit
2 x Securing wires
2 x Treaded adjusters
2 x Locking nipples
4 x Screw in eyes & Rawplugs

FUEL BED ARRANGEMENTS- EXACT DUAL FLAME BURNER ONLY

When arranging the Media into the Firebed, it is imporant that the Pilot area is kept clear and that no Media enters the pilot shield area.

When comissioning or servicing the Appliance - Cross Lighting must be checked to ensure smooth lighting of the main burner from the Pilot Flame and the lighting of the 2 x pistols

Pistol Burner – Under Log Burn - *Log arrangement – 3 x log set*

PLEASE NOTE THE LOGS ARE MADE OF A CERAMIC MATERIAL DO NOT HANDLE THEM WHEN THEY ARE HOT AS THEY ARE BRITTLE AND COULD BREAK – ALLOW THEM TO FULLY COOL BEFORE HANDLING



2 X TOP VIEW OF PISTOL LOG THE RIGHT & LEFT HAND ARE THE SAME LOG JUST IN REVERSE

BOTTOM VIEW OF PISTOL LOG SHOWING THE SLOT THAT THE FIREBOX PISTOL BURNER ARM FITS OVER



1 X CENTRE LOG WITH SLOT IN IT THIS FITS OVER THE BASE CENTRE BURNER



2 X SMALL PIECES

1 X LONG PIECE





1 X BAG OF GREY BLACK SHALE

3 X SMALL LUMPS OF BURNT WOOD

LAYOUT OF LOGS INTO FIREBOX – UNDERSTANDING THE FIREBOX

Please ensure the 3 x logs, Shale and Lumps of Burnt wood are installed as per the instructions to make sure the fire performs correctly

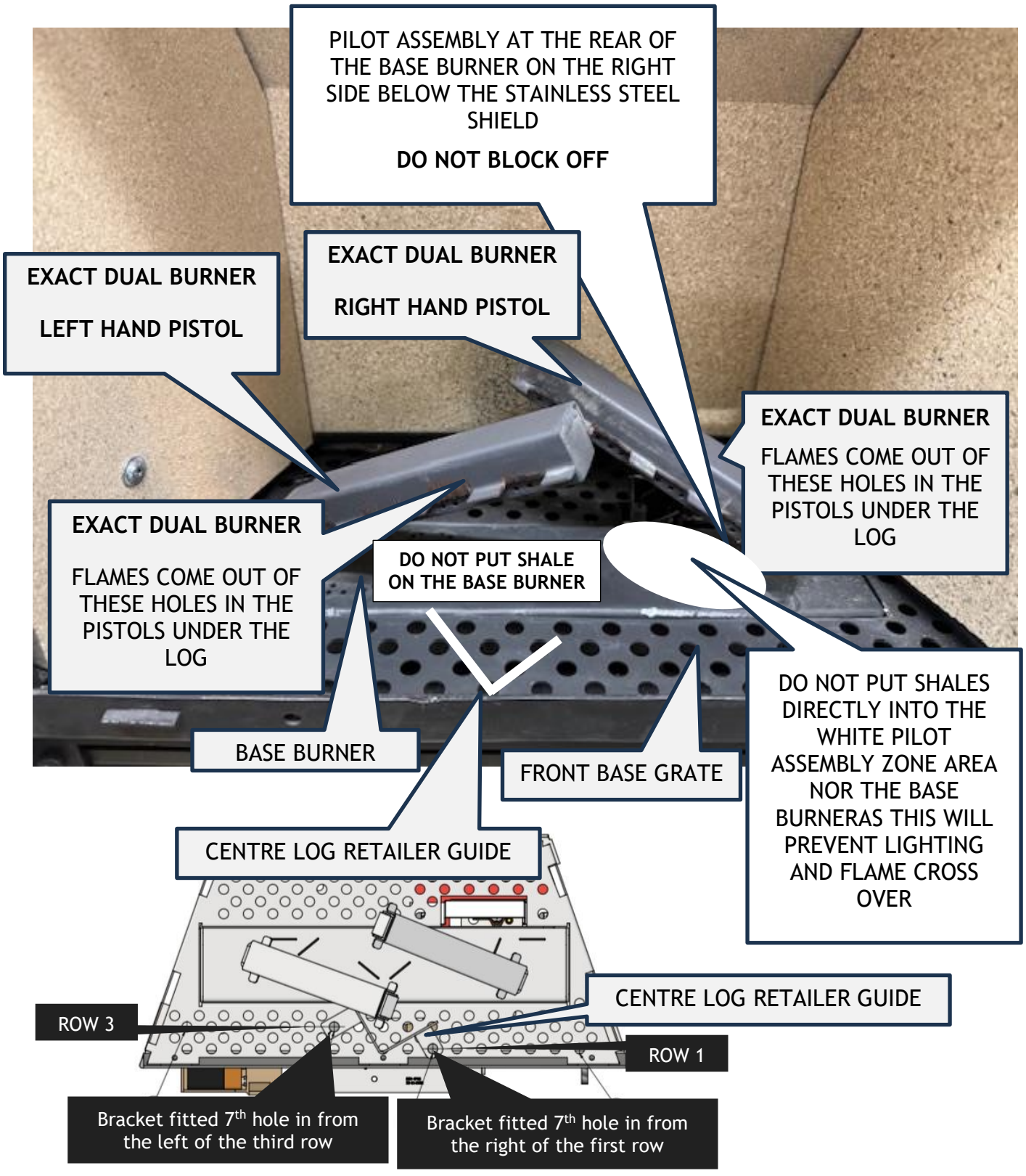

STEP 1 – PLACE CENTRE LOG INTO THE FIREBOX OVER THE CENTRE BURNER



CENTRE LOG FITTED CORRECTLY INTO THE CENTRE LOG RETAINER

CENTRE LOG RETAINER

EXACT DUAL BURNER LEFT HAND PISTOL

EXACT DUAL BURNER RIGHT HAND PISTOL

CENTRE LOG – VERY IMPORTANT
ENSURE THE LOG IS SET INTO THE CENTRE LOG GUIDE. MAKE SURE THERE IS A GAP UNDER THE CENTRE OF THE LOG FOR THE FLAMES TO COME AROUND THE CENTRE LOG – **DO NOT PUT SHALE UNDER THIS LOG**



CENTRE LOG RETAINER ENSURE CENTRE LOG IS FITTED CORRECTLY INTO THE RETAINER



CENTRE LOG

TOP VIEW WITH HOLE IN THE TOP – FIT THIS LOG SO A FLAME FROM THE BASE BURNER DOES NOT COME DIRECTLY THROUGH THE HOLE BUT THE LOG WILL GLOW IN THE CENTRE WHEN FIT CORRECTLY

CENTRE LOG

SHOWN UNDER THE 2 X PISTIOL BURNING ARMS.HOLE FITS OVER THE CENTRE OF THE BASE BURNER



CENTRE LOG

UNDERNEATH VIEW – SHOWING THE BOTTOM CUT OUT THAT FITS OVER THE BASE BURNER

STEP 2 – PLACE THE RIGHT HAND LOG ONTO THE RIGHT HAND PISTOL

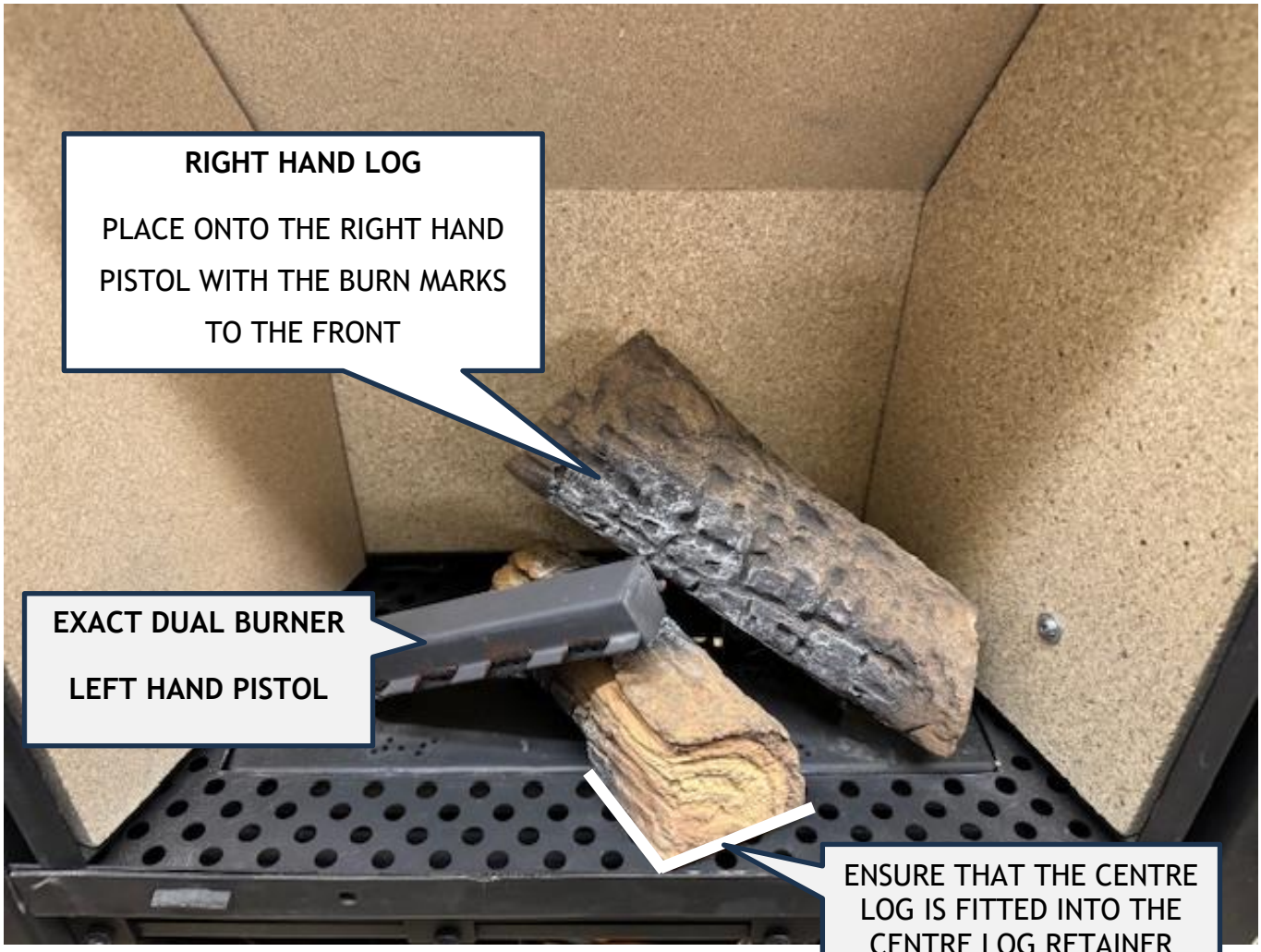



RIGHT HAND LOG

FRONT VIEW OF THE LOG



RIGHT HAND LOG
CUT OUT UNDER SIDE OF LOG THAT THE BURNER PISTOL SITS INTO

STEP 3 – PLACE THE LEFT HAND LOG ONTO THE LEFT HAND PISTOL



STEP 4 – PLACE THE SHALE ONTO THE FRONT GRATE PLATE

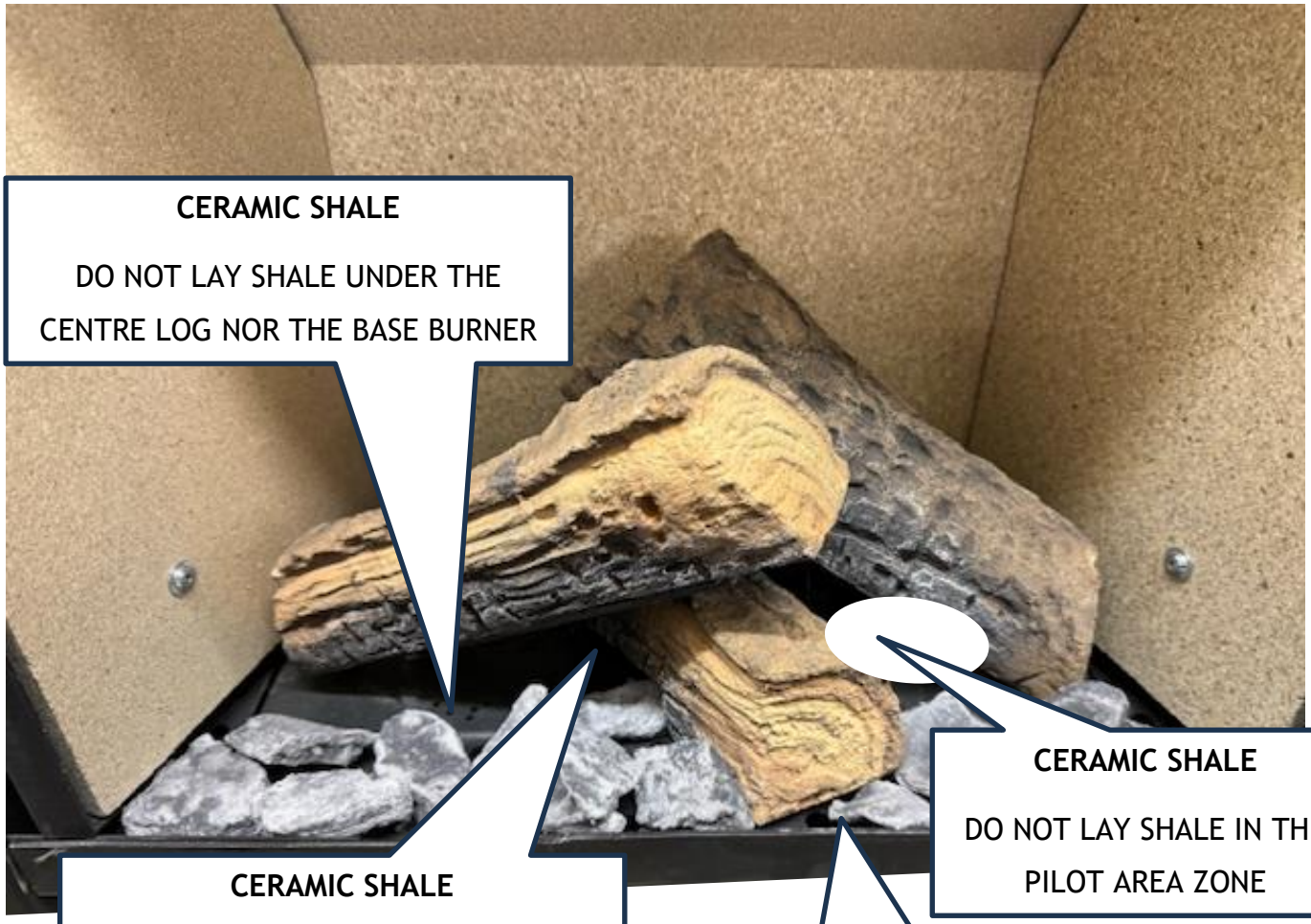



CERAMIC SHALE

BAG OF GREY BLACK SHALE

STEP 5 – PLACE THE 3 X BURNT LUMPS ONTO THE SHALE

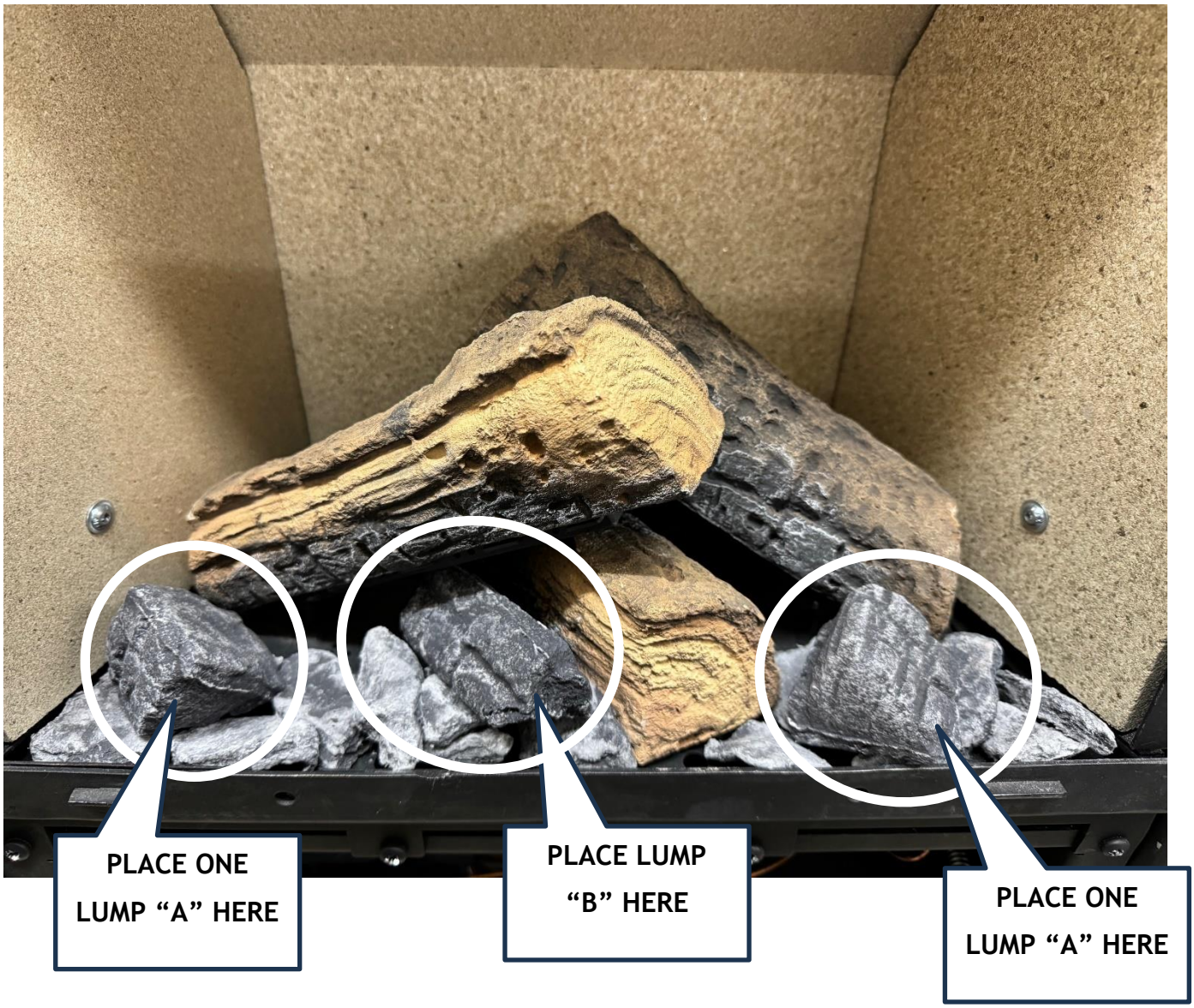

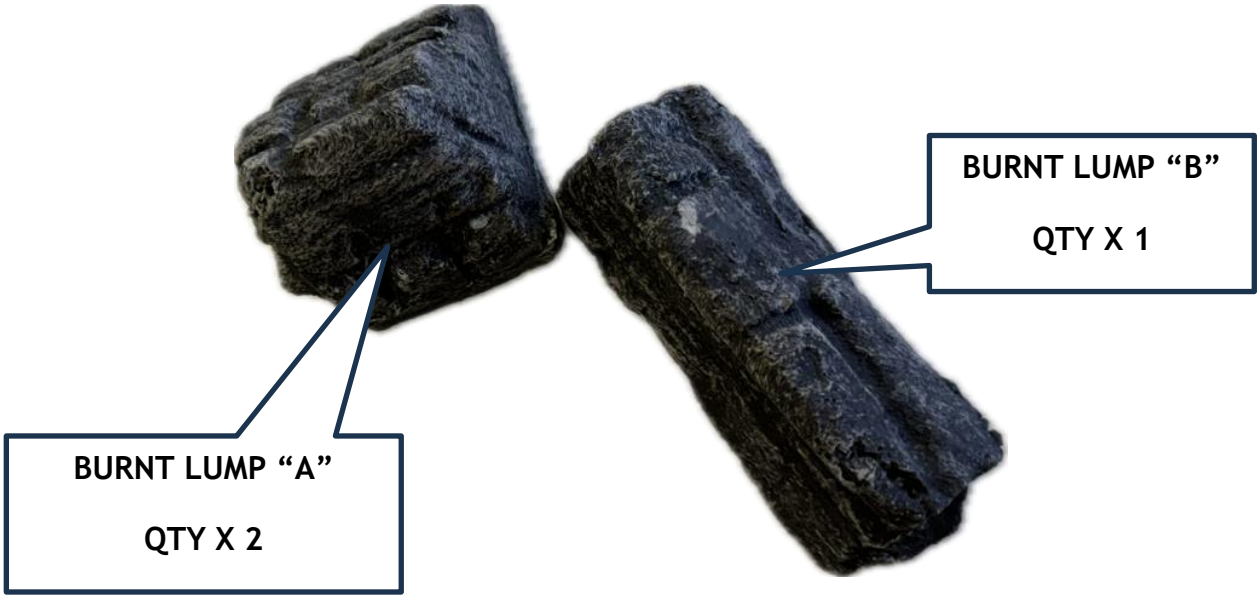

COMMISSIONING THE APPLIANCE

3.8.1 Pilot Ignition Check

1. Ignite the pilot light as described in the User Instructions
2. Check that the pilot flame stays alight, ensure the pilot is flame is stable and not being drawn off the pilot or blown out. If this is the case the draw from the flue is too strong and a flue restrictor needs to be fitted and/or a cowling on the top of the flue pipe
3. Extinguish the pilot light

4) Ensuring that the igniter is sparking onto the pilot and not to the PILOT cover plate

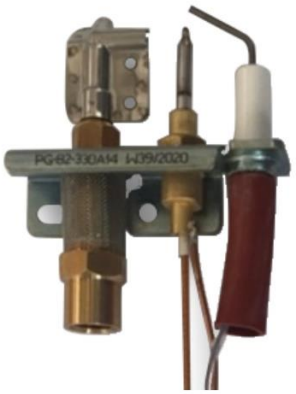

Picture showing the Pilot Assembly Complete

3.8.2 Main Burner Check

1. Ignite the pilot light as described in the User Instructions
2. Turn on the main burner as described in the User Instructions
3. Check that the pilot smoothly cross-lights to the burner and that the main burner & pilot stay alight, ensure that there is no shales embers in the pilot assembly zone which needs to be kept clear
4. Extinguish the appliance fully

3.8.3 Pressure Check

The appliance is pre-set to give the correct heat inputs as listed in the technical details. No further adjustment is necessary. Always check the inlet pressure on hot and cold

DO NOT ATTEMPT TO ADJUST THE PRESSURES ON THE VALVE THIS WILL VOID YOUR WARRANTY

1. Turn off the gas valve on the appliance
2. Release the screw on the Inlet Pressure test point (this Test Point is part of the ON/OFF Isolation Tap the installer fits and connect a manometer)
3. Check that the measured pressure is as the prescribed supply pressure
4. Perform the test when the appliance is burning on full (High Flame)
5. If the pressure is low, check the gas supply pipes are to a correct sizing
6. If the pressure is too high (more than 5 mbar over) the appliance may be installed, but the gas supply company should be contacted

When opening this test point the room must be well ventilated and no naked flames or sparks are to be near the stove. You must fully leak test the valve/stove after commissioning

FREQUENTLY ASKED QUESTIONS

NOTE: ONLY ATTEMPT WORK AS RECOMMENDED IN THESE INSTRUCTIONS AND WHERE YOU ARE SUITABLY QUALIFIED

WHAT SHOULD I DO IF MY FIRE DOES NOT LIGHT OR STAY LIT.

- Check if gas supply is on.
- If the fire is hot, wait for fire to cool down.
- Remove battery pack and check batteries are ok, with no leaks visible, or any other contamination present. If in doubt replace with new, unused batteries.
- When replacing batteries, ensure contacts are clean, dry, and free from any contaminants or surface damage. Be careful not to bend or displace contacts.
- Ensure to mount batteries in correct orientation.
- Replace battery cover
- Check ceramic logs are in correct place and in good condition.
- Perform any general cleaning of the fire as detailed in this manual, particularly around the pilot assembly.
- Replace correctly any part of the fire that was removed to allow access to the valve.
- Start fire using the remote control.

.

If the fire still does not function correctly:-

- Double check all of the above, in particular that the batteries are good, mounted correctly, and all contacts are clean and sturdy.
- Ensure the Pilot Assembly is clean or replace with a new Pilot Assembly unit.
- Reset the valve as above.
- Attempt to restart the valve several times.

.

HEALTH AND SAFETY NOTICE

This appliance uses fuel effect pieces manufactured from Refractory Ceramic Fibres (RCF). Care must be taken to avoid excessive exposure to these materials as they may cause irritation to the eyes, skin, nose and throat. When Handling avoid inhaling and contact with skin and eyes. It is recommended that disposable gloves are worn in addition to a facemask and eye protection. After handling wash hands thoroughly and any other exposed parts which may have come in to contact with the material.

If a vacuum cleaner is used to clean the fuel bed or areas around the appliance there fragments of the material may have fallen it is recommended that it be of the type fitted with a HEPA filter.
Care should be taken when disposing of RCF materials. It is important to keep any dust to a minimum so it is recommended that the fuel effect components are placed into a heavy duty plastic bag. The bag should be clearly labelled **RCF WASTE**.
These materials are not classified as hazardous waste and should be disposed of at a site approved for the disposal of industrial waste.

SERVICING

Turn the appliance OFF and isolate the gas supply. Ensure the appliance is fully cold before attempting to start servicing the appliance. No liability can be accepted by Leaf Stoves for injury caused by burning or scolding by a hot appliance.

A suggested only procedure for servicing is listed below.

A. Lay out dust sheet on flooring, mask off any special fireplace materials.
B. Open Outer Firebox Door/Glass panel
C. Carefully remove the Ceramic components (including Embers)
D. Use a Vacuum cleaner to clean the top of the burners and grate
E. Remove the 2 Part Grate and the side and rear ceramic bricks
F. Use the vacuum cleaner and a soft brush to clean the pilot assembly and Injectors. It may be easier to access the Injector by removing the Throttle. Never modify or bend the Thermocouple. **We recommend the pilot assembly is replaced every 12 months during the service**
G. Clean the Window Panel.
H. Turn on the gas supply and check for leaks, check the burner and Pilot for good condition and Operation – with a strong pilot flame
I. Replace the Grate front and back and replace the bricks
J. Replace the Fire bed arrangements as per the approved layout
K. Check door inner glass seal, replace if damaged, do not over tighten the screws Close door. – please ensure no finger prints are on the glass
L. Check the flue system and terminal, making sure that the terminal vent is fully clear
M. Light the appliance and test setting pressures
N. Check the safe operation of the appliance.

CLEANING THE CERAMICS

Remove the ceramics as detailed in A - C above.

Gently clean the ceramics in the open air, using a soft brush and a vacuum cleaner. Where necessary replace damaged components only with genuine Leaf Stoves specified parts. Seal any scrap ceramics in plastic bags and dispose of at a proper refuse site. When using a vacuum cleaner, it is recommended that one with a HEPA filtering system is used. The ceramic Log set & Embers contains RCF's

Re-fit the Fire bed arrangement, re-seal the appliance and check the safe operation of the appliance.

4.2 Servicing the Burner

Access the Burner as detailed in A - E above.

The pilot is now clearly visible, the pilot, including the Thermocouple, can be replaced/serviced by removing raising the pilot assembly from its mounting. This is done by removing the two screws on the surface of the pilot. The fittings on the under-side of the pilot can be un-done using a 10mm spanner where appropriate. **We recommend the pilot assembly is replaced every 12 months during the service, this unit covers the thermocouple, pilot light and igniter unit complete**

The Main Burner Injector can be accessed from the underside of the appliance. If the burner needs to be removed, this may be done by removing the 3 fixings at the front of the firebox, the burner will lift out through the Firebox as one complete unit

When replacing any parts use only original genuine Leaf Stoves specified parts otherwise your warranty will not be valid

INJECTOR AERATION:

The aeration is factory set and ***MUST not*** be altered in any way.

The installer must fill in commissioning check list sheet upon instillation.

Pressure Check:

Always check the inlet pressure. The appliance has been adjusted to give the correct heat inputs and needs no further adjustment.

1. Turn off the appliance.
2. Release the inlet pressure test point and connect a manometer.
3. Check that the pressure is as the supply pressure stated.
4. Perform the test when the appliance is burning on full.
5. If the pressure is low, check the gas pipes are the correct size.
6. If the pressure is too high (more than 5mb) the appliance may be installed, but the gas provider must be contacted.

Note: After checking the pressures and removing the manometers, the screws in the Pressure Test points ***must*** be closed, and the system must be checked for gas-tightness.

Flame stability:

On starting the appliance, the ignition will light the pilot, once the main valve opens to high rate to allow gas through to the burner. All of the burner should light within 5 seconds lighting the whole burner area. If the appliance fails to do so turn off the unit and re-light after 5 minutes.

There should be no problems lighting the burner. Check the stability of the flame turning from low rate to high rate, repeat this a few times observing the stability of the main burner and pilot flame.

Customer handover:

Give full instruction to the customer stressing the handset safety feature.

- Warn of smell and smoke on new product whilst ensuring room is well ventilated
- Inform the customer not to disturb the logs
- Inform the customer not to run the unit with the door open
- Inform the customer an annual service is required on the unit as the flue may get blocked with no one knowing.
- Show and explain the function of isolation valve
- Explain to the customer the function of the flame sensing device, if the product continually turns to isolate the unit and call a Gas safe engineer.
- Explain that a safety feature of the valve has a 5 minute time delay on re-ignition.

Customer Warning:

- **DO NOT BLOCK AIR INTAKE OR VENTS**
- **DO NOT TOUCH THE APPLIANCE WHEN IN USE A GUARD CONFIRMIMG TO BS8423:2002 TO BE USED BY A CHILD, AGED AND/OR INFIRM PERSONS**
- **DO NOT PLACE COMBUSTABLE MATERIALS INFRONT OF THE UNIT**
- **DO NOT STAND INFRONT OF THE UNIT AS LOOSE CLOTHES MAY COMBUST**
- **DO NOT USE THE APPLIANCE IF THERE IS A CRACK IN THE GLASS OR THE GLASS SEAL IS PERISHED, REPLACE THE PARTS.**

Ensure the installer details are filled in.

Hand over the installation manual to the customer.

SERVICE AND MAINTENANCE

The appliance should be serviced annually by a qualified Gas Safe Engineer

Annual Maintenance:

Ensure the appliance is cold before carrying out a service.

Isolate the appliance and disconnect the unit.

Always test for gas soundness and spillage test after refitting the appliance.

Check all logs, pilot burner/ignition unit, for soot or debris deposits. Replace all misplaced logs and retest.

On the failure of pilot burner/ignition or control valve, have the repairs carried out by a Gas safe engineer.

Check the door seal for soundness, if needed replace.

Changing the batteries

The batteries can be replaced.

Service Procedure:

Isolate the gas supply. Ensure the appliance is cold before attempting to start servicing the appliance. No liability can be accepted for injury caused by burning or scolding by a hot appliance. Suggested procedure for servicing is listed below:

- Cover floor area liable to become contaminated during servicing.
- Open appliance door.
- Carefully remove the log and embers and the inner ceramic side and rear panels
- Use a vacuum to clean the top of the burners and grate.
- Remove the 2 part grate.
- Use the vacuum cleaner and a soft brush to clean the pilot assembly. Do not bend the thermocouple.
- Turn on the gas supply and check for leaks, check the burners and pilot for good condition and operation.
- Replace the grates
- Close the door and check door seal.
- Check the flue making sure there are no blockages and all is clear.
- Light the appliance and test setting pressures.
- Check for safe operation of the appliance.

Inspecting the Flue / Chimney

The inspection of the flue / chimney must be carried out on an annual basis or if there is a fault or suspected fault with the appliance not expelling the combustion gasses correctly. Perform a spillage check to confirm.

If the appliance fails, isolate the appliance and a flue inspection is to be carried out.

Remove all debris, soot, masonry etc. If there are excessive amounts of debris the register plate must accessed to clean the void area. On completion of the servicing/maintenance a spillage test must be carried.

SERVICE AND MAINTENANCE

Issue	Check List
Unit does not respond.	Check remote is working properly.
	Check battery power supply.
	Check wiring is correct.
Handset does not work.	Check battery power.
	Check handset is in range
	Ensure the handset is paired.
Unit starts but no spark or weak spark.	Check spark lead is connected properly.
	Check spark electrode is in the correct area and the gap correctly distanced.
	Check spark lead is not arcing on other parts of the appliance
Unit sparks but does not light pilot.	Check for a good spark.
	Check the spark is in the correct area.
	Check if the ventilation is not too strong.
	Check if there is gas running through.
If there is no gas.	Check isolation tap/shut off valves are free from grease.
	Check isolation tap/shut off valve/s are on.
	Check for blockages.
If there is gas but pilot does not light.	Check pressure is correct.
	Check for blockages.
	Check for draughts.
	Check the pilot gas slots are clear.
	Check for a clear spark.
Pilot lights but does not light main burner.	Check the pilot flame is heating the thermocouple.
	Check ventilation is not too strong.
	Check ventilation is not too strong and the flame is not blowing off the thermocouple and flame rectification probe.
	Check gas pressure is correct.
	Check pilot and burner flame stability.
Burner lights but turns of within a short period.	Check ventilation is not too strong and the flame is not blowing off the thermocouple and flame rectification probe.
	Check gas pressure is correct.
	Check pilot and burner flame stability.

GAS ENGINEER SERVICING INFORMATION FOR THE GAS CONTROL VALVE & REMOTE CONTROL

IMPORTANT INFORMATION FOR INSTALLERS.

THE INFORMATION CONTAINED IN THIS SECTION IS FOR EXCLUSIVE USE OF QUALIFIED AND APPROVED SERVICE PERSONNEL.

- THE HANDSET IS SUPPLIED PAIRED TO THE VALVE. DO NOT ALTER PAIRING.
- THE HANDSET IS CONSCIOUSLY DESIGNED TO MINIMIZE THE RISK OF ACCIDENTAL OPERATION AND CAN THEREFORE TAKE A MINIMAL TIME TO LEARN TO USE COMFORTABLY.
- PLEASE EXPLAIN TO THE CUSTOMER TO ENSURE UNDERSTANDING OF HOW TO USE THE REMOTE CONTROL AND MANUAL OPERATION OF THE GAS CONTROL VALVE.
- IF PAIRING HAS BEEN INADVERTENTLY ALTERED THE HANDSET WILL NOT WORK, IT WILL NEED A FACTORY RESET – FOLLOW INSTRUCTIONS ON HOW TO RE-PAIR THE HANDSET.

MOST COMMON CAUSES FOR FAULT.

- BATTERIES NEED REPLACING.
- BATTERIES MOUNTED INCORRECTLY.
- CONTAMINATION OF BATTERY CONTACTS & LEAKING BATTERIES (CLEAN WHERE POSSIBLE, REPLACE VALVE/HANDSET IF NECESSARY).
- CONTAMINATION OF PILOT
- CONTAMINATION OF VALVE INTERNALS FROM GAS PIPE PARTICLES.
- FAULTY GAS SUPPLY.
- FAULTY THERMOCOUPLE, TTB OR CONNECTIONS.
- CONTAMINATION IN GAS SUPPLY.

SYSTEM OPERATION EXPLANATION.

Remote Version Only - The ignition phase (first 15-30 seconds) operates with the thermocouple excluded from the circuit, subsequently the thermocouple holds the valve magnet open, as per a conventional system. (If the burner stays lit only for this duration, it is a sign of no thermocouple current, or insufficient thermocouple current reaching the valve).

The electronic flame sensing device is in constant operation whilst the valve is in operation.

It is important that, at all times, the pilot flame is in good order, both the thermocouple tip and electrode tip are immersed within the pilot flame, and the ignition cable is undamaged & well connected to the valve.

Contamination of the gas supply pipe and any damage to the Gas Control Valve, is not covered by the Leaf Stoves Warranty

CLEANING & SERVICING THE PILOT ASSEMBLY – POINTS TO CHECK!

PILOT ASSEMBLY.	ENSURE THE EARTH WIRE IS FITTED FROM THE PILOT ASSEMBLY BODY TO THE VALVE
• Check for blockage in gas pipe to pilot, or injector inside pilot. • Check for a contaminated pilot assembly. **NOTE: The pilot is an integral part of the safe operation of the fire and MUST be changed at every Annual Service to ensure safe operation of the fire, this will also help to reduce the risk of problems during operation. Each pilot is date coded to enable tracking of the age of the pilot. Any warranty will be immediately void if the Pilot Assembly is not changed every 12 months.** • Cleaning the pilot between services. The pilot must be kept clean of any debris, dust, or contamination. If not, the fire may not light well, and may not light/run at all.	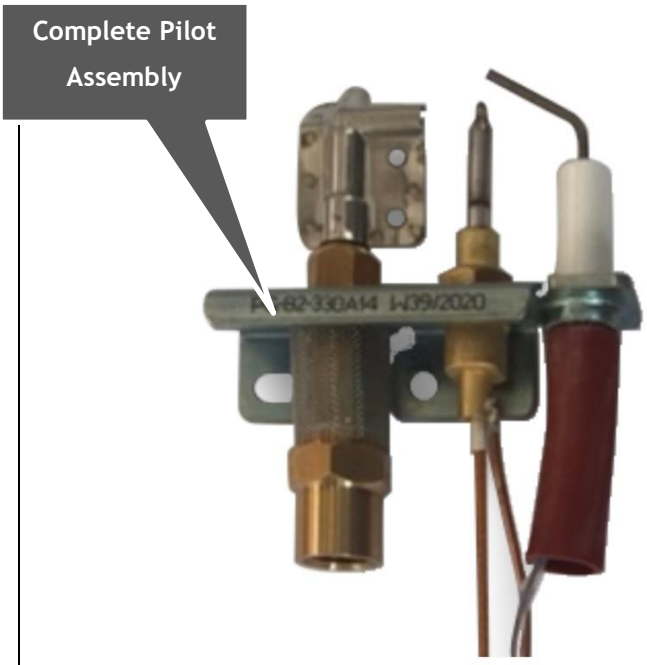
SPARK ELECTRODE – WHITE CABLE	
• The electrode consists of an ignition cable, white ceramic body, and a wire tip – these parts must be kept completely clean. • A new, unused, clean, dry paintbrush is recommended for cleaning the pilot assembly and electrode tip. NOTE: Soot deposits which are a carbon contamination that can occur. This is quite common, particularly if the artificial logs have not be laid properly within the stove, or if they have moved during use. This may not appear to be a significant problem, but because of the conductive nature of carbon it is possible that the spark may track out via such deposits and not light the pilot gas flame. • If ignition cable insulation becomes damaged, it is unlikely that the spark will reach the pilot burner, and therefore ignition will be prevented.	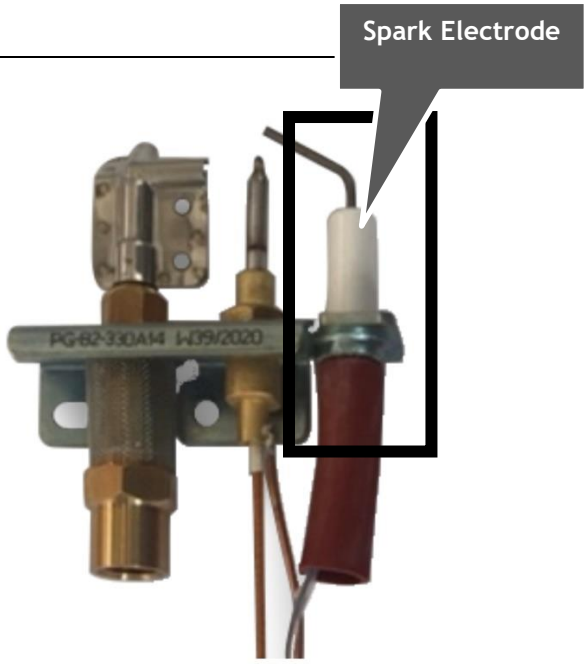 Electrode in black box outline

<table>
<tr><td>PILOT LIGHT & AIR INLET APERTURE.</td><td></td></tr>
<tr><td>

- The air intake hole on the pilot are very small and can become contaminated from the ambient environment.
  - Dust can be very hard to see, but even a small amount can stop the fire from lighting.
- During operation, the Flue draws air in from outside, any airborne particles (e.g. dust & pollen) can also be potentially drawn in. The rate at which this occurs depends on a number of environmental factors.
- Cleaning of the pilot is required at least once a year (in between services) but is recommended more regularly.

</td><td>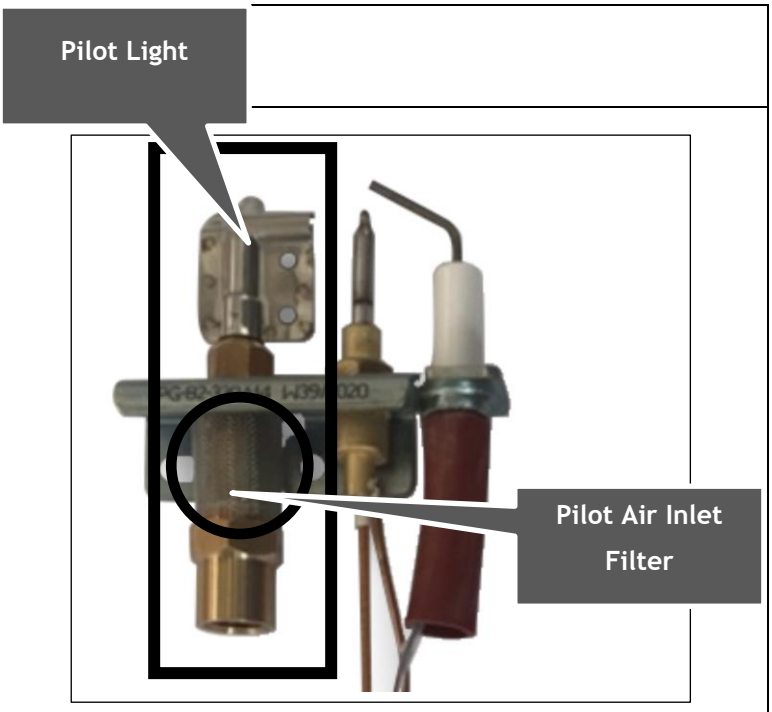

Pilot Light in black box outline</td></tr>
<tr><td>THERMOCOUPLE</td><td></td></tr>
<tr><td>The thermocouple should be replaced annually at service, if the stove will not light, check that the tip of thermocouple is not damaged in anyway</td><td>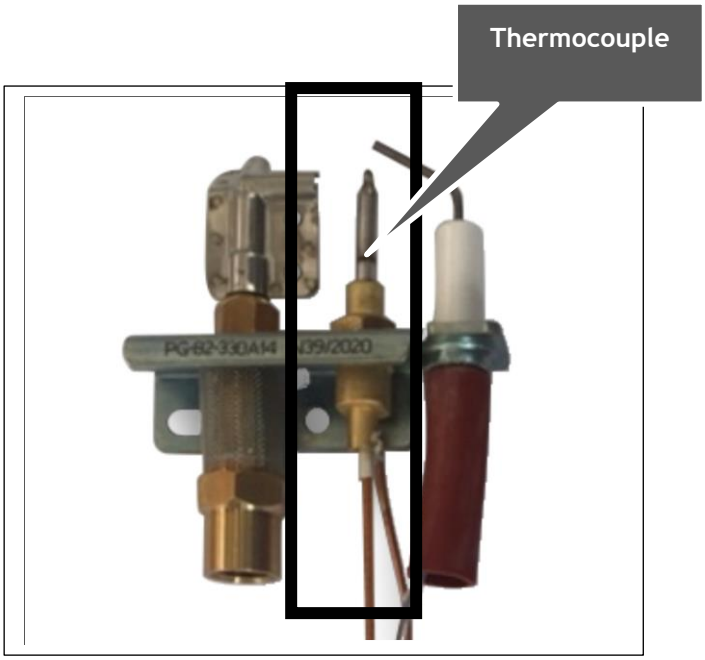

Thermocouple in black box outline</td></tr>
</table>

WHERE TO OBTAIN SPARES - All spare parts for this stove must be purchased from your retailer or directly from Leaf Stoves Spares, only Genuine Leaf Stoves spares can be used for you Warranty to be valid

Leaking Batteries.
• If batteries leak and damage the handset this is not a fault of Leaf Stoves. • To minimize the risk of battery leakage, the batteries should be changed well before they are completely empty, and at a minimum once every 12 months as a preventative measure. • Although any brand of alkaline battery can be used, some are known to be better than others. We recommend **ENERGIZER, PROCELL** OR **DURACELL** batteries, as they have performed well under test conditions, store power well, and claim to be more resistant to leaking than competitor products. • **DO NOT USE RECHARGABLE BATTERIES** • **We recommend if you are not going to use the stove for a period of time greater than 12 weeks remove the batteries from the Stove and the remote control to avoid leaking**

PLEASE NOTE – LEAF STOVES TAKES NO RESPONSIBLIY FOR INCORRECT BATTERIES BEING USED, DAMAGE TO THE CONNECTORS WHEN FITTING THE BATTERIES OR LEAKING BATTERIES OR ANY DAMAGE TO THE REMOTE CONTROL OR THE VALVE BECAUSE OF LEAKING BATTERIES OR DAMAGED CONNECTOR. THIS IS NOT COVERED BY ANY WARRANTY OFFERED ON THIS STOVE BY LEAF STOVES

User Instructions

The flue must be fitted in accordance with Local and National Regulations and must not be shared with any other appliance.

A flue specialist should inspect the flue system on an annual basis to ensure that the flue system is sound and the combusted gasses escape correctly. The outlet (terminal) is clear of obstruction.
It is highly recommended that a full service on the appliance be carried out annually by Gas safe engineer.

The gas connection must be in accordance with Local and National Regulations. Installation and servicing must be carried out by a gas safe engineer in line with relevant regulations.

It is mandate that a Carbon Monoxide detector that conforms to EN 50291 is installed in the same room where ever a gas appliance is installed.

Do not operate the appliance if the glass is broken, or door is open. Do not to block the air intake on the appliance. Do not make changes to the appliance.

Fireguards

All parts of the appliance are hot during normal operation, so it is recommended that in the presence of young children, the elderly or infirm persons a guard conforming to BS 8423 should be used.

Do not leave children and persons who cannot judge the consequences of their actions alone with a burning appliance and place the remote control out of reach.

Allow adequate clearances from combustibles materials such as curtains, soft furnishings, electrical appliances or any items that may get damaged through heat.

Curtains should not be installed above the appliance.

Curtains must not be installed close to the appliance. A minimum clearance distance of 1000mm around the appliance for curtains with an additional allowance being made for curtain movement so that the 1000mm perimeter is not compromised.

Do not place combustible materials or soft furnishings directly in front of the appliance.

Blown vinyl wall paper must not be used on the chimney breast where the appliance is fitted.

The whole of the appliance becomes hot during operation and has to be classed as a working surface.

Do not place carpets or rugs directly in front of the appliance. A carpet fitted to a raised hearth is considered acceptable.

Do not alter the logs in the appliance as soot may form.

The pilot light and flame sensing device fitted to this appliance is also an atmospheric sensing device, designed to shut off the appliance if the evacuation of products of combustion is disturbed. If the appliance repeatedly shuts off after being relit - a GAS SAFE registered engineer should be contacted to examine the appliance and installation.

Ventilation:

GB appliances under 7kW (Gross & Net) do not require permanent ventilation in accordance with BS 5440-2.

Upon lighting the appliance, the flame will start off blue and will gradually turn a more orange colour as the flue, logs and appliance heat up.

- The appliance must not be operated if the door glass is broken or has been removed.
- The appliance should always be observed when lighting.
- Improper installation, service, maintenance, adjustment or alterations may cause injury or property damage.
- Do not disturb, add extra logs or embers as this will affect combustion.
- Do not operate the appliance if the logs are damaged.
- The appliance must be installed and maintained by a suitably qualified and registered gas engineer.

Ensure this manual remains with the appliance.

Important Notes:

Before performing any cleaning or maintenance ensure the appliance is cold.

- Ensure the glass is clean on both sides as dirt; oils etc can etch the glass through heat.
- Do not clean with abrasive materials.
- Ensure the door is fitted correctly and the door seal is intact to avoid spillage.
- Check spillage after carrying out work.
- The glass may collect a white powdery residue on the inside of the glass this is a combination of minerals and acids in the gas, clean as required.
- It is known the longer any residue is left on the inside of the glass the harder it is to remove.

Cleaning Paintwork

Use a clean soft dry brush or a vacuum to remove dirt and debris from the appliance. DO NOT USE ANY CHEMICALS OR OILS TO CLEANTHE APPLIANCE.

Cleaning Glass

The door glass (Ceramic) is specially formulated to withstand very high temperatures use a mild glass cleaner. Use a soft cloth to avoid scratching.

Fuel Bed Components

Wear suitable safety equipment when cleaning the inside the appliance. It is advised to wear protective gloves and a dust mask conforming to EN 149:2001+A1:2009 FFP3 when cleaning the logs and embers. A soft brush is advised to clean the logs and burner unit. It may be necessary to clean the fire if debris or soot deposits have accumulated on the logs.

The ceramic parts are fragile; care must to be taken when handling this product.

Do not change the log layout or the quantity of material.

When placing the logs, it is important to carefully follow the log layout, the layout has been set to give the best performance and flame picture of the appliance any deviation may cause poor combustion. - The addition of further ceramic components is prohibited.

Ceramic components should last around 3 years in normal use at which time is recommended that they are replaced. Replacements can be bought from your stove Stockists. State the model number (found on the gas fire data plate). Always ask for genuine parts.

5.0 Technical Data -

LEAF STOVES
11, VILLAGE FARM ROAD
INDUSTRIAL ESTATE PYLE,
SOUTH WALES, CF33 6BL
WWW.LEAFSTOVES.CO.UK

BURNER TYPE	EXACT - 2 X PISTOLS
STOVE TYPE	CONVENTIONAL FLUE
GAS TYPE	NATURAL GAS (NG)
STOVE MODEL	LEAF ASPEN - 16 X 22
INLET GAS	20 MBARS PRESSURE
VALVE	SLIDE or REMOTE
BURNER SERIAL NO.	

C91 C31 C11

UKCA 0359-22

	PRODUCT ID 0359DP00053	HEAT INPUT (Kw)		GAS INLET PRESSURE		MODEL NO – ASP/1622/CF/SL
GAS TYPE	SUPPLY PRESSURE & GAS CATEGORY	MBAR	NETT	HEAT OUTPUT	MBAR	COUNTRY OF DESTINATION
NG	I2H G20@20 Mbar	5.70 KW	5.20 KW	4.50 KW	20	UNITED KINGDOM (UK)
NG	I2E G20@20 Mbar	5.70 KW	5.20 KW	4.50 KW	20	UNITED KINGDOM (UK)
NG	I2E+ G20 -- G25 @20 - 25 Mbar	5.70 KW	5.20 KW	4.50 KW	20	UNITED KINGDOM (UK)

THIS APPLIANCE MUST BE INSTALLED IN ACCORDANCE WITH THE RULES IN FORCE, & USED ONLY IN A SUFFICIENTLY VENTILATED SPACE CONSULT INSTRUCTIONS BEFORE INSTALLATION & USE OF THIS APPLIANCE - A CARBON MONOXIDE ALARM MUST BE FITTED IN THE ROOM WITH THIS APPLIANCE – A SPILLAGE TEST MUST BE COMPLETED ON THIS APPLIANCE

UKCA - PLATE A – LOCATED ON THE OUTSIDE OF THE FIREBOX

UKCA LEAF STOVES PIN 0359DP00053
NATURAL GAS @ 20MBAR INLET PRESSURE
MODEL LEAF - ASPEN - ASP/1622/CF/SL
GROSS HEAT INPUT 5.70KW NETT HEAT INPUT 5.20KW
CONVENTIONALLY FLUED INSERT GAS FIRE
THIS APPLIANCE MUST BE INSTALLED IN ACCORDANCE WITH THE RULES IN FORCE, & USED ONLY IN A SUFFICIENTLY VENTILATED SPACE CONSULT INSTRUCTIONS BEFORE INSTALLATION & USE OF THIS APPLIANCE – A CARBON MONOXIDE ALARM MUST BE FITTED IN THE SAME ROOM AS THIS APPLIANCE – A SPILLAGE TEST MUST BE COMPLETED ON THIS APPLIANCE BEFORE IT IS USED

UKCA - PLATE B

LOCATED ON THE LEFT HAND SIDE FRONT OF THE FIREBOX OR BEHIND THE CAST DOOR ON THE STOVE FRONTED VERSION OPEN THE CAST DOOR TO VIEW

Minimum Efficiency (at 1.0m flue height)	**90% - Efficiency Class A**
Heat Input Gross	**5.70 kW's**
Heat Input Nett	**5.20 kW's**
Heat Output to the Room	**4.50 kW's**
Gas Inlet Pressure	**20 Mbars**

The Aluminium serial plate for the fire is found when the fascia is off the fire on the front of the burner assembly

Checking & Testing the Stove after Installation - Undertaking as a minimum the 7 x tests and checks listed below on the stove after installation, all testing and checking must be in compliance with the latest Building Regulations and Gas Safe requirements

1 - Gas Tightness Test - Now carry out a Gas Tightness Test on the appliance installation

2 – Check if there is any Spillage from the flue

3 - Gas Safety Device Test - Turn the Gas off to the stove using the Test Point On/OFF Tap that you have fitted to the rear or side of stove, ensure no gas is able to enter the stove

4 - Check the Supply Inlet Pressure in mbars

5 - Check the Nominal Heat Input Gross (Hs) in kW

6 - Check the Nominal Heat Input Nett (Hi) in kW

7 - Check the Gas Consumption Rate in l/min

The above checks & tests are the minimum requirement, it is the responsibility of the Gas Safe (qualified engineer) who is undertaking the installation, to ensure the stove installation is safe and meets the latest Building Regulations and Gas Safe regulations and requirements

5.1 Gas Burner & Gas Valve Controller - Spare Parts

Gas Burner & Gas Valve Controller - Spare Parts

Part No	QTY	DESCRIPTION	Part No	QTY	DESCRIPTION
ECG 8001B	1	Log Pack – 3 pieces Pistol Burner	ECG 8007/NG	1	Pilot Assembly NG Gas
ECG 8002	1	Ember Pack	ECG 8009/NG	1	NG Gas Injector – Pistol Burner – Central Flat Burner
ECG 8003	1	Deluxe Remote Handset	ECG 8010/NG	1	NG Gas Injector – Pistol Burner – Pistol
ECG 8004/NG	1	Gas Valve Controller – NG Gas			
ECG 8005/NG	1	Complete Burner Assembly NG			
ECG 8006	1	Leaf Stoves Approved Mains Adapter			

5.2 Warranty Details

Leaf Stoves - Gas Stove – 2 Year Warranty

It's important to know what requirements need to be met in order to qualify for our 2 year warranty, as well as being aware of exactly what it covers. This warranty only applies to our gas conventional flue stoves.

If you have purchased your stove from an authorised stockist within our Premium Retailer Network, then automatically your product will carry a 2 year warranty. The start date for the warranty period is the date of purchase. You do not need to register your stove for the warranty to apply, but you must retain your proof of purchase from the Leaf Stoves retailer a copy of the Local Authority Certificate, which must have your name, address and the date of the purchase. Then from the serial number on your stove we can then action your warranty, you must have the stove serviced every 12 months and keep the service receipt for the warranty to be valid. Any product purchased outside of our Premium Retailer Network will carry a standard 12 month, non-extendable warranty.

It is a condition of the Warranty that the installation complies with relevant Building Regulations and the rules in force, and is carried out by a suitably trained and qualified individual Gas Safe registered in the United Kingdom (or equivalent in other countries) with a certificate of installation and the appropriate commissioning report completed and retained by the end-user. Please refer to Appendix 1 & 2 overleaf

It is also a condition of the Warranty that your Leaf Stoves is regularly serviced (every 12 months) by a suitably trained and qualified individual, Gas Safe registered in the United Kingdom (or equivalent in other countries). Records and receipts of annual services will be required in the event of a warranty claim during the period of the warranty.

This warranty is not transferable, and solely for, the benefit of the original purchaser of the stove. Please retain your dated sales receipt as a proof of purchase.

During your warranty period, only genuine Leaf Stoves spare parts must be used in the servicing and maintenance of your stove, these spare parts can be ordered via the Premium Retailer directly.

Consumable items such as glass, paint, grate parts, log retainers, thermocouples, pilots lights, igniters, ceramic fuel effects, internal linings, batteries and rope seals which are either subject to normal wear and tear or parts that require replacement in connection with normal maintenance are not covered, either by the Warranty. The Flue system is not covered by any warranty from Leaf Stoves.

Should you experience problems with your stove, any claim must be submitted first to the Premium Retailer from where the stove was purchased. Your Premium Retailer will either be able to offer immediate assistance or make contact with Leaf Stoves on your behalf.

Warranty Exclusions and Limitations
No Warranty is extended to consumable service parts. Repair or replacement of parts which are subject to normal wear and tear during the warranty period or parts that will require replacement in connection with normal maintenance. Such parts include but are not limited to glass, paint, rope seals, grate parts, log retainers, thermocouples, TTB's, pilots lights, igniters, ceramic fuel effects, batteries and internal linings.

The Leaf Stoves Warranty does not cover:

a) In normal usage the paint finish of your Leaf Stoves may change colour slightly. As these circumstances are considered normal, they are not covered by the warranty. The stove paint must be cured as detailed in this manual

b) Enamelled components where these parts are subjected to abnormally high temperatures, chemical abrasion or thermal shocks, resulting in chipping, cracking, bubbling or discolouration and crazing of the enamelled finish.

c) Damage resulting from installation and usage where the appliance has not been installed or used in accordance with the Leaf Stoves installation and operation instructions, or if the installation does not conform to local building, fire and safety regulations. This includes the entire flue system whether purchased from Leaf Stoves or not

d) Defects or faults caused by specific local conditions such as draught problems, water damage, condensation and chimney defects.

e) The Warranty does not cover damage caused by over-firing of the appliance. (Please see your Installation and Operating Instructions for further information)

f) The entire flue system

g) Misuse of the remote control including water/liquid/heat damage

h) Damage caused by unauthorised modifications, use or repair.

i) Damage or defects caused by the product being stored in a damp, unheated environment.

j) Consequential loss (to the extent permitted by law) relating to other associated products that have not been supplied by Leaf Stoves.

k) Consequential loss (to the extent permitted by law) related to decorations, furnishings or other household assets.

l) Delivery to/or return transport costs. Removal and re-installation costs, or any labour cost to fit parts Repaired or replaced products are covered only for the remainder of the original warranty period. If you should ever wish to make a warranty claim because of a product fault or defect, you must inform your retailer within a reasonable amount of time, this is within 14 days from the date on which the fault or defect first became apparent. If the product fault or defect is notified after 14 days from the date on which the fault or defect became apparent, Leaf Stoves cannot accept any liability for events or issues which arise after the 14 day period or which are caused or increased by the lack of notification which therefore prevented action being taken to restrict or eliminate any consequences arising from the fault or defect at an earlier date.

M) Takes no responsibly for incorrect batteries being used, damage to the connectors when fitting the batteries or leaking batteries or any damage to the remote control or the valve because of leaking batteries or damaged connector.

N) Any foreign bodies found in the Gas Control Valve – including Brick Dust

In the event of a product fault occurring during the warranty period, Leaf Stoves will send the appropriate component or goods necessary to rectify the fault, free of charge, but does not cover any labour cost to fit them.

Nothing in the Warranty shall make Leaf Stoves liable for any or special, incidental or consequential damages, injury to persons or property, or any other consequential loss beyond the consumer's statutory rights. The liability on these issues is covered by Leaf Stoves Terms and Conditions of Sale.

Leaf Stoves total liability extends only to the purchase price paid for the goods by the Premium Retailer,

The Leaf Stoves Warranty does not affect your statutory rights.

The above warranty terms and conditions came into effect on 1st January 2013 and are applicable for all relevant products purchased after this date.

Please note: This warranty is applicable for purchases within the United Kingdom and the NI

Appendix 1 - Appliance Commissioning Checklist & Customer Sign Off

Section 1 to 3 - to be completed by the Gas Safe Engineer
Section 4 & 5- to be completed by the Customer & the Gas Safe Engineer

SECTION 1 - FLUE CHECKLIST	YES	NO
Is the Flue correct for appliance?		
Has the flue been checked for its soundness		
Have the Flue Collar been fitted correctly & gasket seals all ok? If required		
Has a Wire Basket been fitted to the outside Horizontal Terminal on the wall? If required		
Has a Flue Restrictor been fitted? - if required		

SECTION 2 - GAS CHECKLIST	*Please write in here the Mbar Measured*	YES	NO
Gas Soundness / Tightness Test & Spillage Test completed – All joints fully tested for any leaks?	**N/A**		
ON/OFF Tap with Pressure Check Point be fitted to the outside of the stove?	**N/A**		
COLD Standing Gas Pressure (Mbar) – Inlet Pressure tested at the above ON/OFF Tap with Pressure Check Point?			
Appliance Burner Inlet Working Pressure (**on HIGH FLAME Setting – HOT Stove**) NB All other gas appliances in the house must be operating on full power at the same time (Mbar)?			
Pilot Assembly – Thermocouple, Oxy Pilot flame & Igniter Electrode are all plugged in to the valve controller, checked & working correctly with a strong straight pilot flame?	**N/A**		
Carried out the 7 x Installation Tests & Checks *refer to S. 5.0 Technical Data*	**N/A**		

SECTION 3 - SAFETY CHECKLIST	YES	NO
Glass checked to ensure no damage, scratches, scores, fingerprints or cracks?		
Ceramic Logs and embers have been fitted correctly? – Not covering the thermocouple area?		
Gas Control Valve (GCV) all working correctly – remote hand set paired & fully working? In appliable		

SECTION 4 - CUSTOMER HAND OVER CHECKLIST	YES	NO
Customer fully understands how to use the slide or remote control? If remote is fitted		
Customer understands all of the functions of the stove?		
Customer is given this copy of the Operating Manual?		
Customer understands how to fit new batteries into the battery pack at the front of the stove and also in the remote handset?		
Customer Understand where the gas shut off valve is installed for the stove?		
Customer knows how to work the stove & understand that the stove becomes very hot at the front when in operation? – **The front hot zone?**		
Customer has no issues with the stove & how to operate it?		

SECTION 5 - CUSTOMER SIGN OFF	GAS SAFE ENGINEER SIGN OFF
Customer Name: Customer Signature: Date:	Gas Safe Engineer Full Name: Gas Safe Engineer Signature: Date: Gas Safe Engineer Registration Number:

Appendix 2 - Annual Servicing Records & Date Batteries are Changed (Valve & Remote)

For your warranty to be valid you must have this stove serviced once a year by a Gas Safe Registered Engineer who is qualitied to service this stove, please record the details here and attach your invoice as proof of service

Annual Service Record – Year 1	**Annual Service Record – Year 2**	**Annual Service Record – Year 3**
Name of Gas Safe Register Engineer who completed the service	Name of Gas Safe Register Engineer who completed the service	Name of Gas Safe Register Engineer who completed the service
Telephone & Email Contact Details	Telephone & Email Contact Details	Telephone & Email Contact Details
Engineers Gas Safe Registration Number	Engineers Gas Safe Registration Number	Engineers Gas Safe Registration Number
Date of Service	Date of Service	Date of Service
Cost of Service	Cost of Service	Cost of Service
Glass Seal Replaced on Inner Glass **YES or NO** – *please circle which one*	Glass Seal Replaced on Inner Glass **YES or NO** – *please circle which one*	Glass Seal Replaced on Inner Glass **YES or NO** – *please circle which one*
Other Notes Pilot Assembly Changed **Y / N** Battery Changed in Gas Valve **Y / N** Battery Changed in Remote **Y / N**	Other Notes Pilot Assembly Changed **Y / N** Battery Changed in Gas Valve **Y / N** Battery Changed in Remote **Y / N**	Other Notes Pilot Assembly Changed **Y / N** Battery Changed in Gas Valve **Y / N** Battery Changed in Remote **Y / N**

Annual Service Record – Year 4	**Annual Service Record – Year 5**	**Annual Service Record – Year 6**
Name of Gas Safe Register Engineer who completed the service	Name of Gas Safe Register Engineer who completed the service	Name of Gas Safe Register Engineer who completed the service
Telephone & Email Contact Details	Telephone & Email Contact Details	Telephone & Email Contact Details
Engineers Gas Safe Registration Number	Engineers Gas Safe Registration Number	Engineers Gas Safe Registration Number
Date of Service	Date of Service	Date of Service
Cost of Service	Cost of Service	Cost of Service
Glass Seal Replaced on Inner Glass **YES or NO** – *please circle which one*	Glass Seal Replaced on Inner Glass **YES or NO** – *please circle which one*	Glass Seal Replaced on Inner Glass **YES or NO** – *please circle which one*
Other Notes Pilot Assembly Changed **Y / N** Battery Changed in Gas Valve **Y / N** Battery Changed in Remote **Y / N**	Other Notes Pilot Assembly Changed **Y / N** Battery Changed in Gas Valve **Y / N** Battery Changed in Remote **Y / N**	Other Notes Pilot Assembly Changed **Y / N** Battery Changed in Gas Valve **Y / N** Battery Changed in Remote **Y / N**

With Leaf Stoves's Policy of Continuous Product Improvement, the Company reserves the right to change specifications and make modifications to the appliance described and illustrated at any time. All stated efficiencies in this manual are derived from flue system designs and measurements as specified in the Gas Testing Standards

Leaf Stoves
Unit 11, Village Farm Road
Village Farm Industrial Estate
Pyle
West Glamorgan
CF33 6BL
United Kingdom

www.Leafstoves.co.uk

BRITISH MADE

This Stove is Manufactured & Tested in the UK

Product Identification Number: 0359DP00053

This is to certify that the appliances listed have been examined and found to comply with the essential requirements listed in:

Annex I of European Council Regulation (EU) 2016/426 of 9th March 2016 relating to appliances burning gaseous fuels.

Energy Efficiency Label

